Hybrid Voltage and Current Control Approach for DG-Grid Interfacing Converters With LCL filters

Jinwei He, *Student Member, IEEE*, and Yun Wei Li, *Senior Member, IEEE*

***Abstract*—This paper presents a hybrid voltage and current control method to improve the performance of interfacing converters in distributed generation (DG) units. In general, current-controlled methods have been widely adopted in grid-connected converters nowadays. Nevertheless, in an islanded system, the voltage control of DG units is desired to provide direct voltage support to the loads. Due to the absence of closed-loop line current controller, the voltage control scheme can hardly regulate the DG unit's line current harmonics. Furthermore, if not addressed properly, the transfer between the grid-connected operation and autonomous islanding operation will introduce nontrivial transient currents. To overcome the drawbacks of voltage-and current-controlled DG units, this paper develops a hybrid voltage and current control method (HCM). The proposed method allows the coordinated closed-loop control of the DG unit fundamental voltage and line harmonic currents. With the HCM, local harmonic loads of the DG unit can even be compensated without using harmonic current extraction. In addition, the HCM guarantees smooth transition during the grid-connected/islanding operation mode transfer. Simulated and experimental results are provided to verify the feasibility of the proposed approach.**

***Index Terms*—Active power filter (APF), current control, distributed generation (DG), LCL filter, microgrid, operation mode transfer, resonant controller, selective harmonic compensation, voltage control.**

I. Introduction

IN ORDER to overcome the disadvantages of fossil energy-based centralized power generation, a large number of renewable energy sources (RESs) have been integrated into the power distribution system in the form of distributed generations (DGs). However, the outputs of many RESs are unregulated dc power or ac power at variable frequencies. To ensure the robust interconnection of these RESs, the interfacing converter with LCL filter is normally placed between RESs and the main grid [1], [2].

For the control of grid-connected interfacing converters, current-controlled methods (CCMs) have been widely used [3]–[9]. In this control category, the real and reactive power references need to be transformed into current references. The current tracking controller is then responsible for regulating the DG current. As a standard solution for interfacing converter operation, CCM with wide control bandwidth can effectively reduce DG line current distortions. In addition, according to the emerging concept of multifunctional DG units with shunt active power filter (APF) capabilities, DG units can also be applied to improve the distribution system power quality by canceling the harmonic currents of local loads [8], [9].

In spite of the advantages of using CCM, the increasing penetration of current-controlled DG units also brings some concerns of conventional power distribution system stability [10]–[12]. The stability problems can be more serious when the power distribution system switches to an off-grid system. In this circumstance, the control mode of DG units is preferred to be changed to voltage-controlled method (VCM) [10]–[15], [17]. However, at the operation mode transfer instant, the conflicts between the conventional CCM and VCM may cause nontrivial transient currents [15], [16]. To ensure a smooth operation mode transfer, some improved methods have been developed [15], [16], where the grid-connected DG system first reduces the line current before switching to an islanded system. When the DG system is isolated from the main grid, a voltage controller is immediately applied to regulate the capacitor voltage of the LCL filter. With this method, transient currents are suppressed at the costs of a few cycles transition delay.

On the other hand, the adoption of VCM for DG units in both grid-connected and islanding modes has no transient issue during the grid-connected/islanding operation mode transfer, which provides opportunities to achieve the "plug and play" operation of DG units in a microgrid [10], [30]. Unfortunately, as the focus of VCM is the fundamental power flow, it cannot directly regulate DG line current harmonics. Therefore, the voltage-controlled DG units are usually sensitive to the disturbances from upstream main grid and local harmonic loads. A modified VCM-controlled DG unit was recently proposed, which realizes enhanced line current quality control through adjusting equivalent converter series harmonic impedances [18]. In this method, the performance of indirect DG harmonic line current regulation relies on the accuracy of point of common coupling (PCC) voltage measurement. For a stiff grid with reduced PCC voltage distortions, it will be less effective as the extraction of PCC harmonic components is difficult.

In order to overcome the limitations of the aforementioned CCM and VCM, this paper proposes an improved DG control method through the simultaneous control of the LCL filter capacitor voltage and line current harmonics. Similar to the VCM, the output power of a DG unit is controlled by the regulation of fundamental filter capacitor voltage. At the same time, a closed-loop harmonic current compensator regulates

Manuscript received July 29, 2011; revised December 4, 2011; accepted February 25, 2012. Date of publication March 8, 2012; date of current version January 30, 2013.

The authors are with the Department of Electrical and Computer Engineering, University of Alberta, Edmonton, AB T6G 2V4, Canada (e-mail: hjinwei@ualberta.ca; yunwei.li@ualberta.ca).

Color versions of one or more of the figures in this paper are available online at http://ieeexplore.ieee.org.

Digital Object Identifier 10.1109/TIE.2012.2190374

the line current harmonics. Owing to the frequency selective features of resonant controllers [6], there is little interference between

0278-0046/$31.00 © 2012 IEEE Fig. 1. Block diagram of grid-interfacing converter systems. (a) Topology of single converter using CCM. (b) Topology of single converter using VCM.

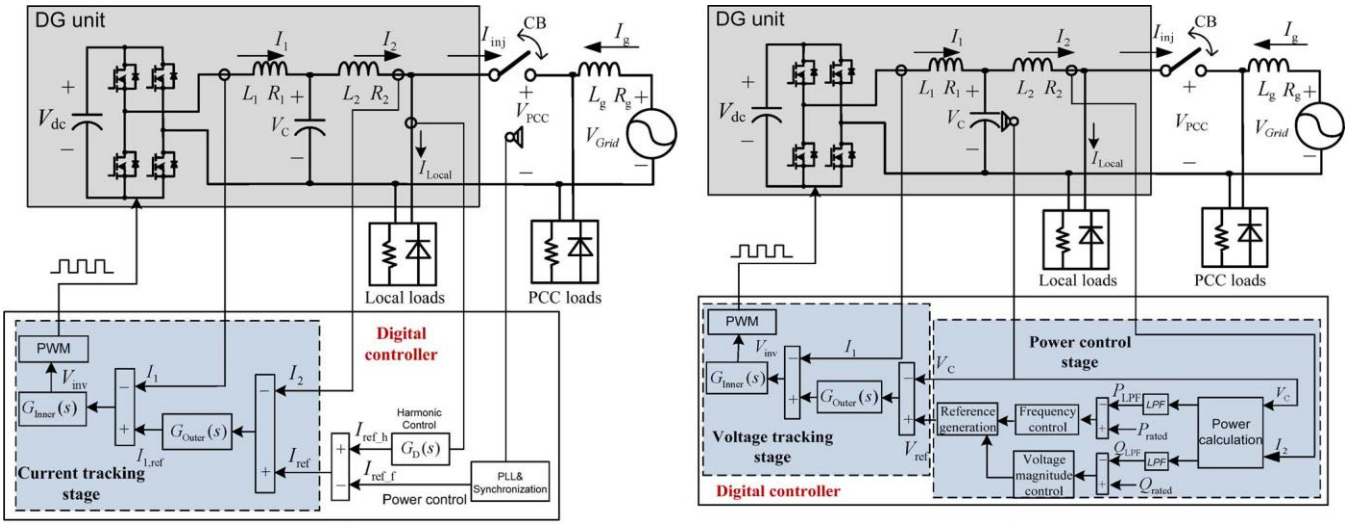

(a) (b)

the fundamental voltage tracking and the harmonic current regulation. Further analysis on the structure of the proposed hybrid control method (HCM) indicates that local harmonic loads can even be compensated without any harmonic extraction process. Finally, the DG unit using HCM can be switched between grid-connected and islanding modes at any time instant, without using additional transient mitigation methods.

The rest of this paper is organized as follows. First, Section II gives a quick review of the operation principle of DG units. The detailed discussion on the proposed HCM is provided in Section III. Further analysis and modeling of HCM-controlled DG units in microgrids are obtained in Section IV. Section V presents the simulated and experimental results. Finally, Section VI concludes this paper.

II. DG Unit Control Using CCM and VCM

To better understand the principle of the proposed HCM, the traditional CCM and VCM are briefly revisited in this section.

A. Principle of CCM

Fig. 1(a) shows an example DG unit where the converter is interfaced to PCC through an LCL filter. There are two types of loads in the system: PCC loads and the local loads placed at DG unit terminals. As illustrated, the line current I_2 is regulated by a well-known double-loop controller. In this case, the outer loop can be a proportional plus resonant controller (PR controller) at the stationary frame as expressed in

$$G_{outer}(s)=K_P+\sum_h R_h \quad (1)$$

$$R_h(s)=\frac{2K_{ih}\omega_{ch}s}{s^2+2\omega_{ch}s+\omega_h^2} \quad (2)$$

where K_p is the proportional gain, K_{ih} is the resonant gain at the fundamental and selected harmonic frequencies, ω_h is the angular frequency at the fundamental or selected harmonic frequencies, and ω_{ch} is the cutoff bandwidth.

Either the inductor current I_1 or the filter capacitor current I_c could be measured as inner loop feedback. For the inner loop controller, a simple proportional control as shown in (3) is normally considered, as its main function is to improve the damping and dynamic performances of the system [4], [12], [18], [19], [23], [25], [29]

$$G_{Inner}(s)=K_{inner} \quad (3)$$

where K_{inner} is the proportional gain.

In order to inject power to the main grid, the synchronized line current reference shall be calculated according to the power reference. Additionally, for a DG unit with shunt power line conditioner function, local load current shall also be sensed. Moreover, its harmonic component needs to be extracted and then added to the DG line current [8], [9].

B. Principle of VCM

The topology of a voltage-controlled DG is presented in Fig. 1(b). In this case, the PCC side filter inductor L_2 needs to be lumped together with DG feeders. For the DG units using VCM, the droop controllers (real power-frequency droop and reactive power-voltage magnitude droop) in the power control stage are shown in (4) and (5) as

$$\omega_{DG}=\omega^*+D_P(P_{rated}-P_{LPF}) \quad (4)$$

$$E_{DG}=E^*+D_q(Q_{rated}-Q_{LPF})+\frac{K_C}{s}\cdot(Q_{rated}-Q_{LPF}) \quad (5)$$

where ω^* and ω_{DG} are the nominal and DG reference angular frequencies. E^* and E_{DG} are the nominal and DG reference voltage magnitudes. D_p and D_q are the droop coefficients for the real power (P_{LPF}) and reactive power (Q_{LPF}) control, respectively.

When DG units operate in the grid-connected mode, the rated power (P_{rated} and Q_{rated}) shall be replaced by the reference power (P_{ref} and P_{ref}). With the integral control of the reactive power difference in (5), zero steady-state error of the reactive power tracking can be achieved [12], [30]. Note that the gain (K_c)of the reactive power integral control needs to be set to zero if the DG unit switches to islanding operation. Therefore, DG units can share the islanded microgrid load demand with droop control. As the voltage control is used for DG units in both grid-connected and islanding operations, there is no transient current during operation mode transition (however, the microgrid and main grid should be properly synchronized before reconnection) [17], [30].

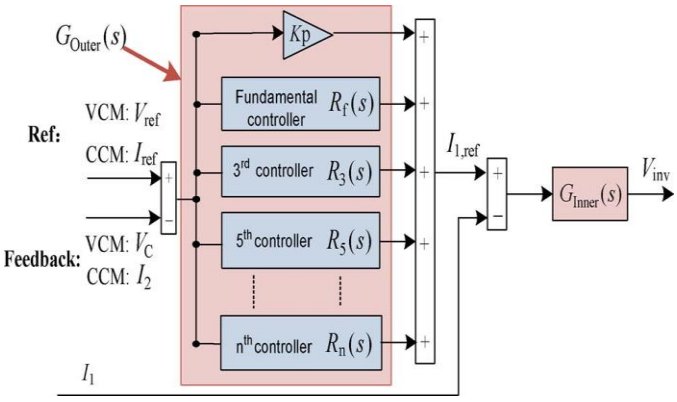

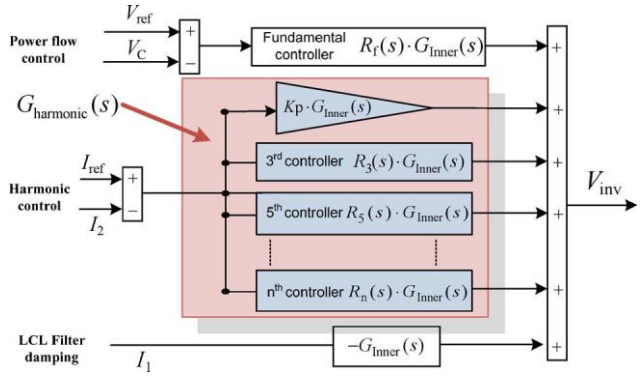

Fig.2.Conventionaldouble-loopcurrent/voltagetrackinginCCMandVCM.

In the voltage tracking stage, a double-loop voltage controller is usually considered (see Figs. 1(b) and 2). Similar to the CCM, the outer loop has a PR controller. In order to reduce the capacitor voltage distortions, parallel harmonic resonant compensators shall also be considered.

In contrast to the CCM, there is no closed-loop line current regulation in the VCM. As mentioned earlier, the inner current loop of VCM mainly focuses on improving system damping rather than line current tracking. Consequently, the line current quality is sensitive to PCC voltage disturbances and the local harmonic loads.

III. HCM

A. Proposed HCM

Although the CCM and VCM have similar controller structure, to maintain proper operation of interfacing converters, their operation principles have been developed separately so far. Due to the conflicts between CCM and VCM, the outer loops of these methods cannot be simply merged together to control both voltage and current.

Nevertheless, it can be noticed that the resonant controllers (2) have a high gain K_{ih} at the selected frequency ω_h, and this gain decreases rapidly when the frequency is out of the bandwidth (ω_{ch}). Due to this frequency selective feature, it is practical to control the capacitor voltage and line current at different frequencies without noticeable interferences.

Furthermore, since the droop control of the DG unit was developed based on the steady-state analysis of power flow between two voltage sources [13], the DG output power flow can be realized through fundamental capacitor voltage regulation using the corresponding fundamental resonant controller $R_f(s)$. Meanwhile, the harmonic line current can be regulated

Fig. 3. Block diagram of the proposed HCM.

by the adoption of harmonic resonant controllers $R_h(s)$(such as h =3,5,7,9,and 11).

Based on the aforementioned discussion, by further incorporating the cascaded structure of double-loop controller into a single-loop parallel structure with multiple input branches, the conventional current and voltage tracking controllers for DG unit control in Fig. 2 can be replaced by the proposed hybrid controller in Fig. 3 as

$$V_{INV} = G_{power}(s)\cdot(V_{ref} - V_C) + G_{harmonic}(s)\cdot(I_{ref} - I_2) + G_{damping}(s) I_1 \quad (6)$$

where the first term is a closed-loop control of fundamental capacitor voltage, the second term is a closed-loop control of line harmonic current, and the third term is a damping term.

The first voltage tracking controller is shown in (7) as

$$G_{power}(s) = G_{Inner}(s)\cdot R_f(s) \quad (7)$$

where $G_{Inner}(s)$ is the inner loop proportional controller in the conventional VCM and CCM. The purpose of term (7) is to control the fundamental component of capacitor voltage, as the reference voltage contains only the fundamental voltage obtained from (4) and (5). It has been revealed that the proportional gain has very limited contribution to the voltage control dynamics, and it was even removed in the controller in [24]. Therefore, only fundamental frequency resonant controller is used for voltage tracking.

The second term in (6), the harmonic current controller, is

h=3,5,7...

This harmonic current controller is used to track the harmonic current reference. As shown in (8), the selective harmonic control is adopted in this paper. Considering that line currents may have some noncharacteristic harmonic currents, a small proportional gain K_p is therefore used in (8) to achieve better

described as

$$G_{harmonic}(s) = G_{Inner}(s)\cdot\left(K_p + R_h(s)\right) \quad (8)$$

harmonic tracking.

Since there is no fundamental frequency resonant controller in (8) and the gain K_p is small, the line harmonic currents and DG fundamental voltage are decoupled, and they can be regulated separately using (7) and (8). As will be illustrated

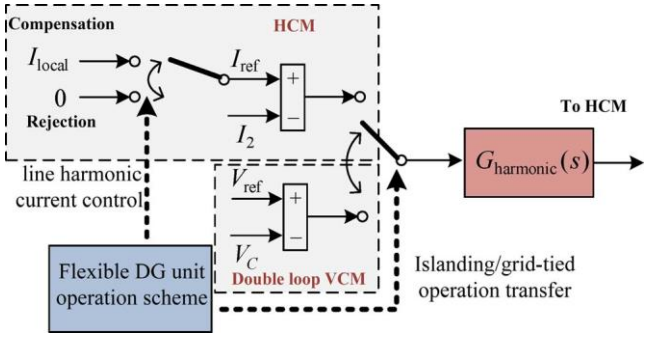

Fig. 4. Flexible operation using HCM.

later, the term (8) is very flexible, and it can be utilized to realize many challenging power quality control tasks in an easier way.

Finally, the controller in the third term is obtained as

$$G_{damping}(s) = -G_{Inner}(s). \quad (9)$$

The major function of this damping term (9) is to provide good damping to the LCL filter resonance (it can be excited by grid disturbances, reference change, or dc link ripples).

B. Flexible Operation of DG Units Using HCM

Using the proposed HCM, a DG unit can operate with great flexibility with local load harmonic compensation mode, line harmonic current rejection mode, etc. Furthermore, the operation transition between the grid-connected mode and islanding mode can be realized seamlessly.

1) Load Harmonic Compensation: The primary aim of (8) is to control the line harmonic current. When the reference current I_{ref} is selected to be the harmonic current of local loads, this term controls the DG unit to compensate most of the harmonics produced by local loads, leaving an improved injection current to PCC. Further investigation finds that (8) has very small gain at the fundamental frequency. Hence, to realize the purpose of shunt APF, the measured total local current (I_{local})can even be directly used as the reference current I_{ref} in (6) without involving any harmonic extraction. This feature is particularly important for many low-power cost-effective DG units with limited computing capability.

2) Line Harmonic Rejection: In addition to harmonic compensation ability, when I_{ref} is set to zero, it reduces DG line current harmonics. In this case, the steady-state performance is similar to that in a DG unit with conventional CCM.

3) Seamless Operation Mode Transfer: It is also important to note that the HCM will change back to the conventional VCM if the input ($I_{ref} - I_2$) in (6) and Fig. 3 is replaced by ($V_{ref} - V_C$). Due to this feature, the challenges during microgrid mode transfer can be easily solved without extra efforts. For instance, as shown in Fig. 4, when the DG unit is first connected to the main grid, the DG unit using HCM can inject the desired power to PCC with little line harmonic currents [corresponding to I_{ref} =0in (6)]. Once the DG unit is disconnected from the main grid, the local harmonic loads need to be supplied by the DG unit with minimized voltage distortion. To satisfy this requirement, the ($I_{ref} - I_2$) in (6)

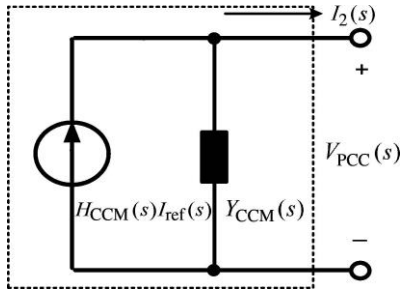

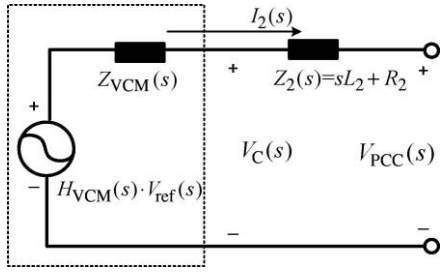

Fig. 5. Norton equivalent circuit for DG with conventional CCM.

Fig. 6. Thevenin equivalent circuit for DG with conventional VCM.

shall be superseded with ($V_{ref} - V_C$) at the transition time instant. By using this method, a true seamless transition is achieved.

It is worth mentioning that, when the off-grid DG units need to be reconnected to the main grid, the aforementioned idea can be used to achieve seamless reconnection in a similar way.