Downloaded from http://www.everyspec.com

3-2.6 ELECTRO-OPTICAL (EO) SENSING FOR FIRING

This mode of sensing is particularly applicable to the infrared (IR) emissions from jet engines. Sensors (photodiodes) are located behind a lens system in the nose of a fuze. Through a signal-processing circuit, these sensors enable the fuze to locate the target and fire when within lethal range.

Passive, solid-state, IR technology is a major advance in proximity-fuzed projectile antiaircraft effectiveness because of its accurately controlled burst positions and improved reliability. There is no degradation of effectiveness when fired close to the surface of the earth, and it is essentially immune to countermeasures when used in the antiaircraft role. This immunity is sufficient reason to supplement RF proximity fuzes with the EO system.

The design of an EO system for a passive IR proximity fuze is determined primarily by considerations of the expected spectral character of the target and its background radiation. The fuze should be capable of discriminating between these two radiating sources.

The optical system of a typical fuze consists essentially of three parts: (1) a band-pass filter (synthetic sapphire with an optical filter on the back side and an optical absorption filter deposited on the front side) for isolating target energy within the atmosphere absorption band, (2) a thick lens (silicon), and (3) a detector (lead selenide (PbSe), which is optically cemented to the rear surface of the lens).

The detector is made up of four 50-deg annular sectors connected electrically to form a bridge. The lens-detector system is designed so that the field of view seen by the four segments of the detector is composed of four sections of a cone whose half-apex angle corresponds to the desired look angle. The electrical signal generated by the detector then consists of a series of 50-deg pulses or 55% duty cycle caused by the rotation of the projectile. The detector functions as a transducer and converts IR energy into electrical energy. The detector material is chemically deposited PbSe operating at ambient temperatures. PbSe is a photoconductive material, and when IR energy is focused on the PbSe, the electrical resistance of the detector decreases. Since the detonator is in a bridge configuration, any change in the resistance of one detector leg causes an unbalance in the dc voltage divider action of the bridge. This change occurs rapidly enough to allow the signal to be capacitively coupled to the preamplifier stage.

Fig. 3-9 shows a block diagram of the signal processing circuitry and a schematic diagram of the firing circuits. The amplifier is one-half of an integrated circuit operational amplifier (OpAmp), which has a differential input that sums the detector output signals. The OpAmp has a single-ended output and a gain of 20. A solid-state coherent detector demodulates the IR detector signals.

This monolithic phase-lock loop (PLL) and detector system exhibits a high degree of frequency selectivity and, due to its coherent nature, offers a higher degree of noise immunity than noncoherent peak detection modulators. The PLL is a frequency feedback system consisting of a phase comparator, a low-pass filter, an error amplifier in the forward path, and a voltage-controlled oscillator (VCO) in the feedback path.

Whenever the two inputs to the phase detector are synchronized, there is an output signal from the phase detector. This output is filtered by the envelope detector and integrator and eventually reaches a threshold level that operates a comparator circuit. The step function output of the comparator provides the trigger pulse for the gate of the silicon-controlled rectifier (SCR). A schematic diagram of the firing circuits is shown in Fig. 3-9(B).

The described IR sensing and signal processing technology is that used in the Navy's MARK 404 passive IR proximity fuze (Ref. 8).

3-2.7 MILLIMETER WAVE (mmw)

Recent advances in solid-state circuitry have made working at millimeter wave (mmw) frequencies practical. The mmw range has been defined as 40 to 300 GHz (Ref. 9). Other terminology includes "near-millimeter waves" for frequencies from approximately 100 to 1000 GHz and "submillimeter waves" from about 150 to 3000 GHz.

The use of these higher frequencies has a favorable potential for fuzing in the following areas:

1. *Antenna Performance.* Narrower bandwidths and higher attainable gain for a given aperture will reduce multipath effects.

2. *Electronic Countermeasures (ECM).* High free space attenuation means low vulnerability to ECM and extremely low side lobe detectability.

3. *Fog, Cloud, Rain, and Snow Immunity.* Low-loss atmospheric propagation characteristics of millimeter waves, as shown in Fig. 3-10, enhance immunity to obscurants.

4. *Size and Weight.* Components scale with wavelength, thus reducing packaging volume and weight.

The recent advances in technology are attributable to the availability of solid-state components of higher power and frequency. The development of injection-locked impact avalanche and transit time (IMPATT) amplifiers, frequency-doubled microwave (Gunn) oscillators, and frequency-stabilized or phase-locked sources has permitted advances in fuzing performance against new threats, such as supersonic and low over-the-terrain or -water missile targets, as well as increased immunity to ECM and obscurants (Ref. 10).

3-2.8 CAPACITIVE SENSING

The XM588 fuze, shown in Fig. 3-11, was designed as a low-cost proximity fuze with near-surface-burst (NSB) capability. It is capable of sensing nonmetallic surfaces and is intended for use with 81-mm mortar projectiles. The system has a very limited sphere of influence, which results in a high resistance to ECM.

Downloaded from http://www.everyspec.com

The capacitive method increases round effectiveness by avoiding the smothering effects experienced when rounds with PD fuzes are fired into soft terrains, such as marsh grass, thick shrubbery, and snow. Detonation occurs approximately 50 mm (2 in.) before contact with most terrains. Over clear terrains—such as mud, water, o[illegible]—a lesser but positive improvement is obtained with the [illegible] fuze. Similar performance occurs at all approach angles including graze. In marsh grass 2 m (7 ft) tall, lethal areas approximately three times greater than for ground bursts are

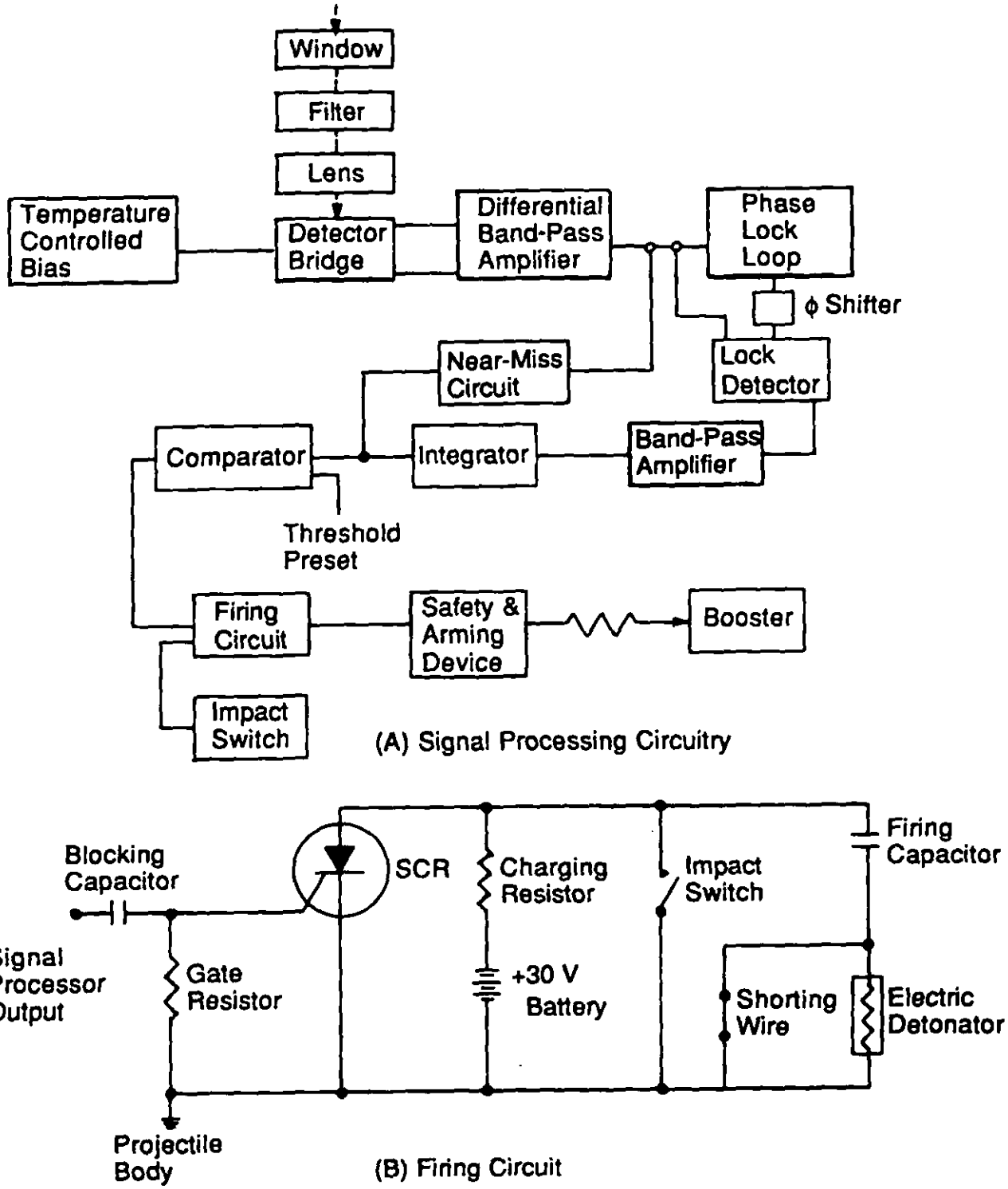

Figure 3-9. Schematic Diagrams of Signal Processing and Firing Circuitry of MK 404 Fuze

Downloaded from http://www.everyspec.com

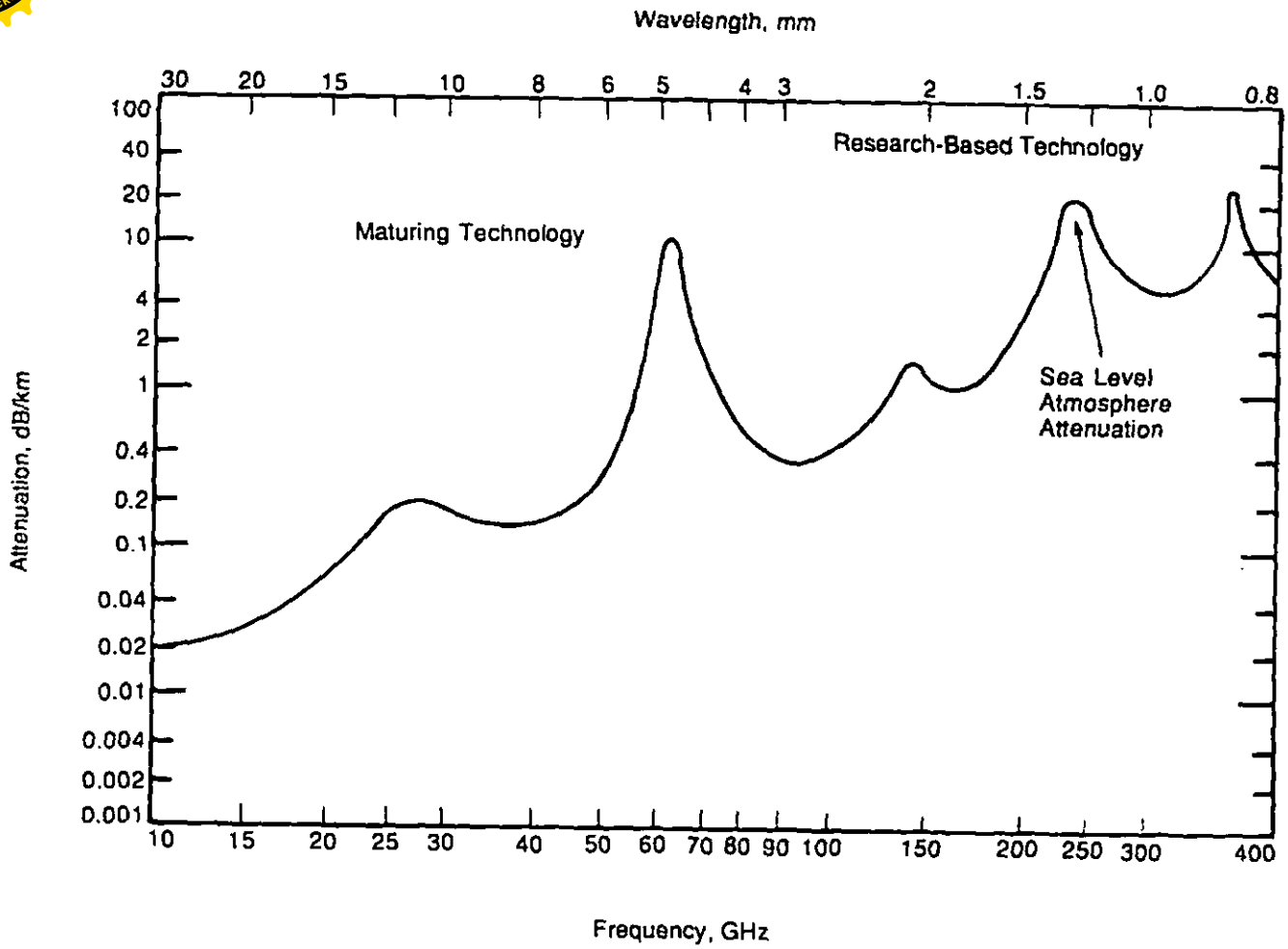

Figure 3-10. Atmosphere Attenuation Windows

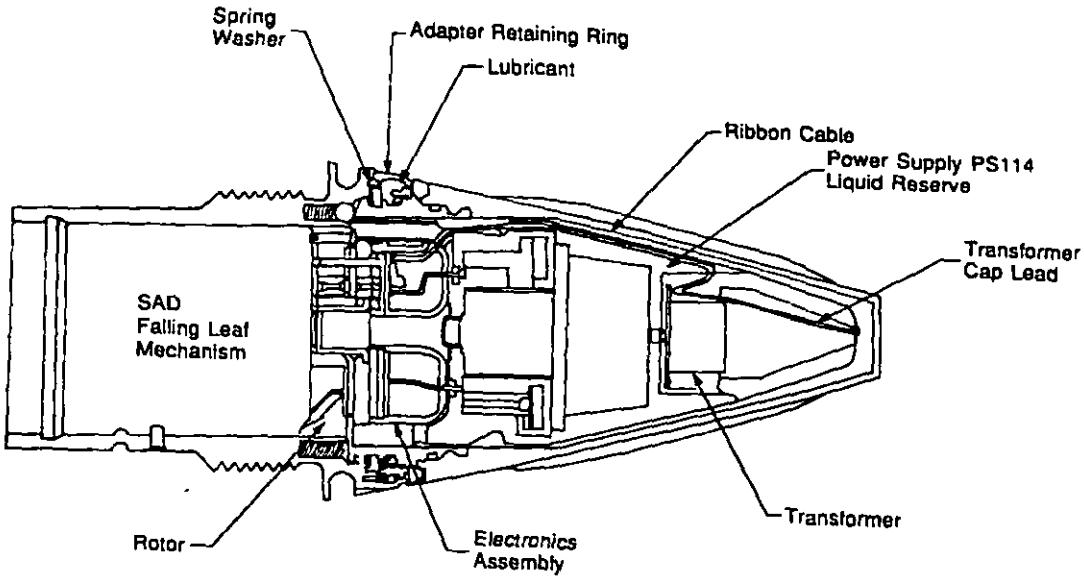

Figure 3-11. Fuze, XM588, Proximity

Downloaded from http://www.everyspec.com

predicted for the NSB against standing or prone troops, and lethal areas eight to thirteen times greater are predicted against troops in foxholes.

This capacitance fuze contains a dc-to-dc converter and a single integrated circuit (IC). The IC consists of an oscillator, a receiver, a firing circuit, a temperature compensator, and a voltage regulator. The power supply is a single-cell, liquid-reserve battery. There is an oscillator cap electrode and an electric field shield. The oscillator consists of a transformer that, in conjunction with the transistors on the IC, provides not only the required electromagnetic field but also the required voltages for the receiver and firing circuits.

The oscillator and receiver, each of which has a very limited sphere of electrical influence, are separated by a shield that reduces the free space capacitive coupling and thereby increases fuze sensitivity. The oscillator is connected to the nose cap electrode, and the receiver input is electrically connected to the fuze sleeve and projectile body. The shield acts as a battery common ground and ground reference for all of the electronic circuitry. The dc-to-dc converter furnishes 14 V to the firing circuit and 7 V to the detector circuitry, as shown in Fig. 3-12.

When the projectile approaches any object, the amount of capacitive coupling between the caps and the receiver electrodes (projectile body) is increased. This stronger signal initiates the firing circuit. The voltage versus standoff is dependent on the target dielectric constant and ground cover density. All measured target types (clear ground to dense cover) produce signals from 6 to 50 mm (0.25 to 2 in.) from nose contact.

Discriminatory circuitry in the receiver assures that the firing signal must have a rate of rise compatible with the approach velocities of the 81-mm mortar shell. Additional circuitry prevents a firing signal until the voltage of the firing capacitor has reached a predetermined level. This prevents firing before the first 6 s of flight time.

3-2.9 SEISMIC SENSING

This mode of sensing can be employed to respond to earth vibrations caused by vehicular traffic. Sensitivity requirements for antipersonnel applications are probably such as to invite premature detonation from other vibrations, such as exploding projectiles. This would be a convenient means of nullifying the minefield based on this type of sensor.

One design consideration would be to build in sufficient intelligence to determine when a vehicle is at an optimum position relative to the mine. This would prevent distant vehicles from triggering the system. Use of a trembler switch would necessitate a battery power source, but the use of a piezoelectric system would eliminate this requirement. The piezoelectric system can fire the mine or alert a locating radar that triggers the mine at the optimum time. These devices offer the additional advantage of the ability to discriminate between a spurious signal and a proper vehicle signal.

Presently, emphasis is being placed on the piezoelectric method; however, it is currently not in use.

3-2.10 ACOUSTIC SENSING

Acoustic sensing is being employed in the development of Mine, AT, XM84, an off-route land mine system designed as a hand-emplaced antivehicular mine. The acoustic sensing system alerts (turns on) a search radar acquisition and firing circuit. The radar determines when the target is in an optimum position relative to the mine. There is also a variant system that uses IR acquisition.

The acoustic sensor must be able to distinguish between a nearby projectile burst and the vehicle noise signature, or it must alert the radar at each significant noise level and rely on the radar to reset the system if the search does not disclose a vehicle.

3-2.11 PRESSURE SENSING

This basic method of target sensing is the oldest used in firing land mines and booby traps. It is simply a convenient method of triggering an explosive charge by the application of weight. A great advantage is gained in that the target is in an optimum, or near optimum, position to realize maximum damage effects.

The antivehicular mine responds to a triggering force of 890 to 3335 N (200 to 750 lb), which provides some selection of targets. The antipersonnel mine is usually set for 111 N (25 lb).

The usual firing mechanism employs a stab firing pin held safe by a Belleville spring, which is forced over dead center for rapid motion to drive the firing pin into the detonator. Par. 12-2.2 illustrates the action of a Belleville spring and presents the design equations. Fig. 3-13 shows a pressure-sensing mechanism in the form of a fuze incorporating the Belleville spring.

3-3 MECHANICAL FUZE INITIATION

3-3.1 THE INITIATION MECHANISM

After the fuze receives information that it should start target action, a number of complex mechanisms may be put into operation. The necessary power to operate the fuze must be made available immediately. This power must then activate any time delays or other necessary features prior to initiation of the first element of the explosive train.

In a mechanical fuze, contact sensing (impact) or presetting (time) is converted directly into the mechanical movement of a firing pin, which in turn is driven either into or against the first element of the explosive train. Functioning delays can be obtained by inertia (See par. 3-2.1.3.1 for further discussion.) or by pyrotechnic devices, which are an integral part of the explosive train. (See par. 4-4.1 for further discussion.)

Downloaded from http://www.everyspec.com

The simplest means of initiation is to use the forces of impact to crush the nose of the fuze and thereby force the pin into the primer. In a base fuze the pin or primer may move forward when relative changes in velocity occur. Springs are also used to provide relative motion between pin and primer, typically in time fuzes for which inertial forces from impact are not available.

Firing pins for stab initiation are different from those for percussion initiation, as explained in the paragraphs that follow. Typical firing pins are shown in Fig. 3-14. Initiation by adiabatic compression of air does not require a firing pin at all. (See Fig. 3-15.)

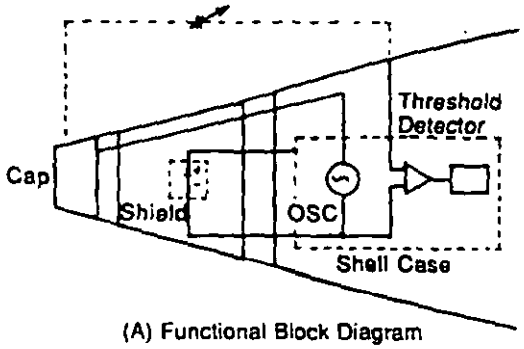

(A) Functional Block Diagram

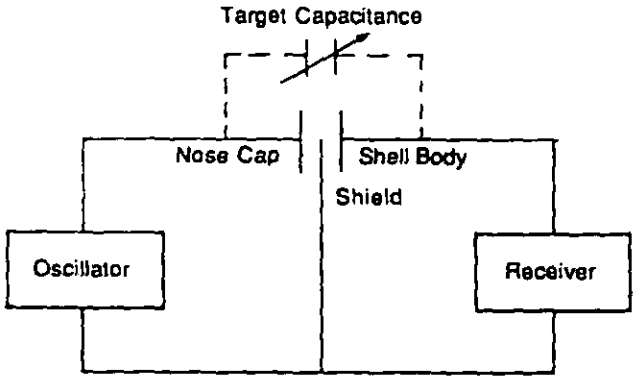

(B) Functional Schematic

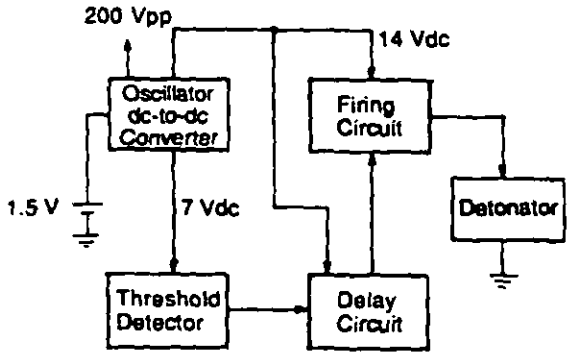

(C) Block Diagram

Figure 3-12. Schematics of Circuitry of Fuze XM588

3-3.2 METHODS OF INITIATION

3-3.2.1 Initiation by Stab

When a firing pin punctures the disc or case of the sensitive end of a primer or detonator, its kinetic energy is

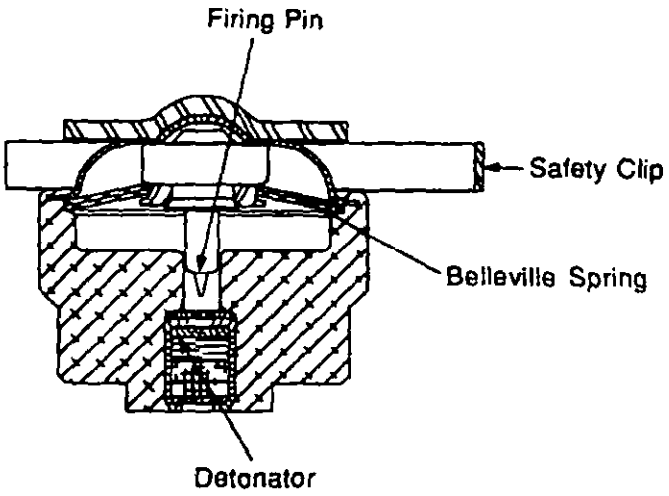

Figure 3-13. Pressure-Sensing Mechanism

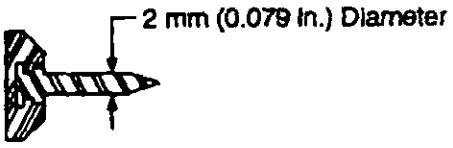

(A) Stab Pin for Fuze, M557

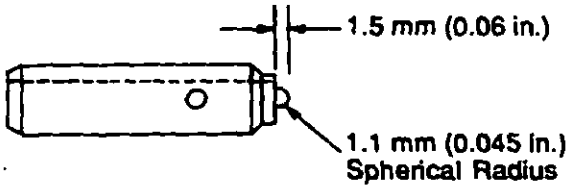

(B) Percussion Pin for Bomb Fuze, M904, to Initiate M9 Delay Element

Figure 3-14. Typical Firing Pins

Downloaded from http://www.everyspec.com

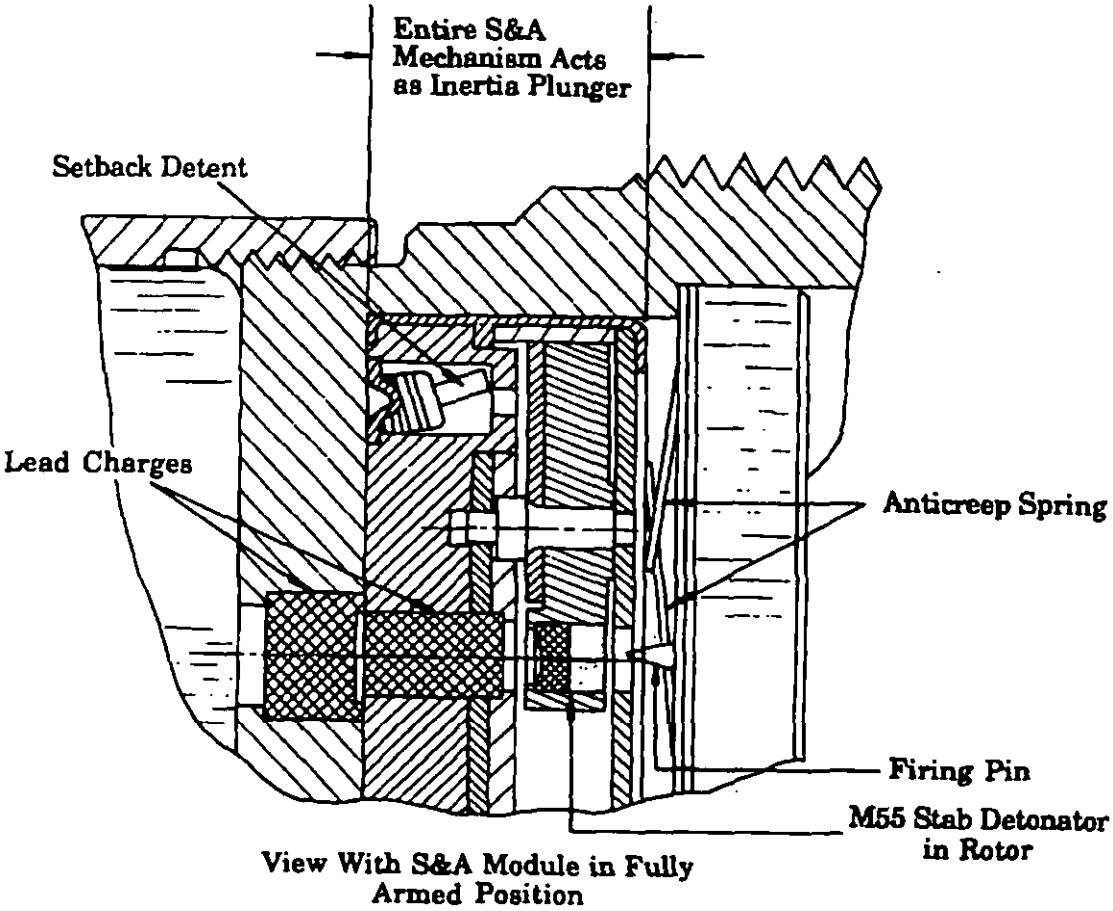

Figure 10-15. Mechanical Backup Initiation Design

volume of high explosive to be effective. There is great opportunity for ingenuity in this kind of ordnance. Fuzes with delayed arming (out to 90 m (300 ft)) and delayed firing after impact (at least one full length of the projectile in the target) presently exist.

The great differences in magnitude between handling and gun environments reduce the complexity of safety devices. A shear wire is often sufficient to obtain handling safety, as shown in Fig. 10-17, and the spin is sufficiently high to permit the use of stiff, C-ring-type centrifugal locks, as shown in Fig. 6-29 (A).

10-6.1 TYPICAL AUTOMATIC CANNON FUZES

The Navy's MK 78 PD fuze, as shown in Fig. 10-17 for the 20-mm round, contains a disk rotor held safe by a setback block and shear wire. It has a minimum delayed arming that provides a safe distance of only 0.3 to 0.6 m (1 to 2 ft) outside the gun muzzle. The M505A3 PD fuze, shown in Fig. 6-29(A), was developed to increase this delay. Delayed arming of 3 to 6 m (10 to 20 ft) is obtained by use of a ball rotor, discussed in par. 6-5.6. Other designs that produce delayed arming to approximately 18 m (60 ft) with a spiral unwinder ribbon (par. 6-4.5) are the Oerlikon fuzes shown in Figs. 10-18(A) and (B). For further developments in increased arming times, see the internal bleed dashpot, discussed in par. 8-2.3.2, for the M758 PD fuze, which has delayed arming distances of 9 to 90 m (30 to 300 ft).

10-6.2 AUTOMATIC CANNON FUZE M758 (FAMILY)

The US Army has developed a basic fuze design, the M758 (par. 8-2.3.2), for use in 20- through 35-mm rounds. This fuze has a delayed arming capability of 9 to 90 m (30 to 300 ft) by means of a pneumatic dashpot timing system. It can have a self-destruct feature for use over friendly troops or a no self-destruct feature for use with aircraft-fired rounds to prevent the aircraft from overtaking the fragments. The salient features of this series are the large number of die-cast parts and nonprecision tolerances, all of which are in the interest of economy. The fuzes have two independent safety features—one is actuated by centrifugal force and the other is actuated in a delay mode by setback force and the pneumatic dashpot.

Downloaded from http://www.everyspec.com

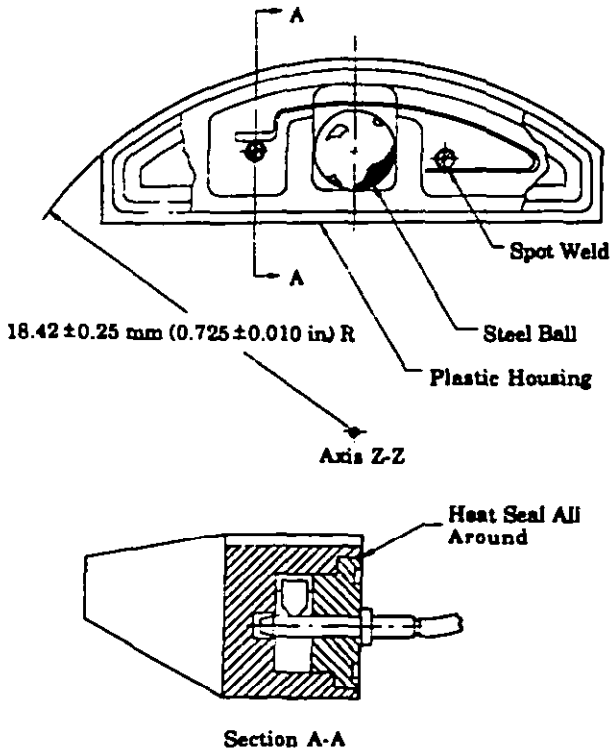

Figure 10-16. M724 Spin Switch

10-7 FUZE TECHNOLOGY FOR CANNON-LAUNCHED GUIDED PROJECTILES (CLGP)

To provide the field artillery with the ability to engage both stationary and moving hard-point targets with a high degree of first-round kill probability, a cannon-launched, nonspin, guided projectile, called the COPPERHEAD, has been designed and is shown in Fig. 1-6.

This round allows the flexibility of using standard propellant charges and interchangeable loading with conventional rounds. The nonspin aspect, however, removes one of the cannon environments normally used to enable the fuze; consequently, a substitute means has been devised, as described in par. 10-7.1.

10-7.1 UNIQUE CONSIDERATIONS

The substitute means of a second environment for the cannon-launched guided projectile (CLGP) is a magnetically induced barrel-exiting signal that generates an arming signal. This system serves another purpose, i.e., sensing a minimum exit velocity below which the fuze will not function. This information is important to determine that the minimum velocity exists to ensure stability of the fin-stabilized round and avert a short-round accident, i.e., insufficient distance.

10-7.2 EXAMPLE OF A CLGP

The M712 nonspin COPPERHEAD high-explosive antitank (HEAT) projectile (Fig. 1-6) can be used interchangeably with conventional ammunition in the 155-mm howitzer. The COPPERHEAD is fin-stabilized, fin-guided, and follows a ballistic trajectory. The guidance system can be designed for IR, millimeter wave, or light amplification by stimulated emission of radiation (laser) designation.

The fuzing system M740, a block diagram of which is shown in Fig. 10-19, is redundant in the interest of higher reliability. Both S&A mechanisms are locked safe independently by a setback release latch and a second latch that requires two independent actions for its removal. During unlatching the setback release latch winds an arming spring, which in turn starts the time-delayed motion of the rotor. If the second latch is not removed within 80% of the delayed travel time (1.2 s nominal) of the rotor, the rotor will return to the safe position.

The action that removes this second latch depends upon the projectile exceeding a muzzle velocity of 183 ± 30 m/s (600 ± 100 ft/s) and upon the availability of electrical power from the on-board battery within 0.6 s after launch.

Projectile exit from the gun tube is sensed by two magnetic induction second environment sensors (SES) that are mounted flush with the projectile surface and spaced 38.1 mm (0.125 ft) apart along the axis. An electronic logic circuit (SESE) receives the SES signals and determines whether or not the proper projectile velocity has been achieved. If this velocity has been achieved and electrical power is available, explosive actuators fire and remove the second latches from the rotors. Premature functioning of the second latches, prior to unlocking of the first latches, will lock the acceleration-responsive rotor locking weight in the lock position and prevent the rotors from arming.

The rotors are further delayed by runaway escapement mechanisms. Final electrical arming of the firing circuit occurs during the guided phase of flight but only after receipt of a target acquisition signal from the guidance electronics.

On impact, the shaped-charge warhead is detonated by electrical energy from target-detecting sensors—a nose-mounted direct sensor and several shock-wave sensors. The shock-wave sensor ensures detonation on graze impacts.

The fuze module housing contains viewing windows that disclose a green zone with S imprinted or a red zone with A imprinted so that the safe (S) or armed (A) status of the rotor(s) can be determined prior to gun loading.

10-8 ELECTRONIC PROXIMITY FUZES

These fuzes use conventional S&A mechanisms for gun-launched fuzes. The target-detecting system, however, provides initiation at a predetermined distance in front of the target for maximum effectiveness. The most common and most used type is the RF fuze. These fuzes are also widely used in guided-missile rounds. Their usefulness against air-

Downloaded from http://www.everyspec.com

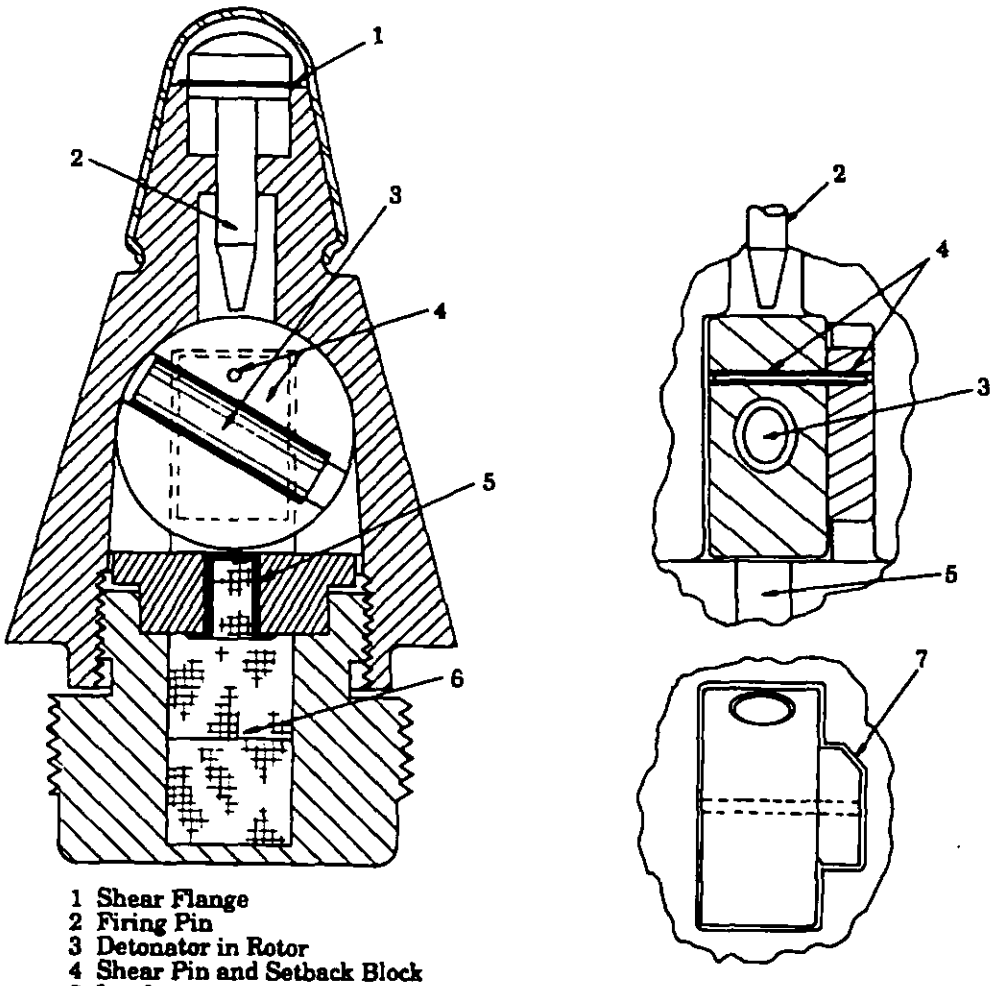

1 Shear Flange
2 Firing Pin
3 Detonator in Rotor
4 Shear Pin and Setback Block
5 Lead
6 Booster
7 Antimalassembly Chamfer

Figure 10-17. 20-mm Fuze MK 78 (Ref. 8)

craft and ground targets is explained in Chapters 1 and 3 (pars. 1-4.1.3 and 3-2.2, respectively).

10-8.1 SENSING TECHNIQUES, OPTIONS, AND DESIGN

Although the RF system was the first and most widely used sensing technique for proximity fuzing, other methods are used because of their special properties (pars. 1-4.1.3, 1-5.4, 1-6.3, and 1-8.3).

Inductive sensing has been used for antitank rounds for which intervening nonmetallic obstructions cannot interfere by causing premature initiation. This method is useful in medium standoff situations to improve the standoff distance for shaped charges (par. 3-2.3).

Electrostatic sensing offers the capability of firing near an aircraft because of the electrostatic envelope surrounding the target. The system can discriminate between signals from electrostatically charged trees and raindrops and offers some selectivity over the RF types. See par. 3-2.4 for additional discussion.

Capacitive sensing has a very limited operating area because it triggers within 50 mm (2.0 in.) of the target or an obstruction, but it offers high resistance to electronic countermeasures (ECM). Additional discussion of capacitative sensing is in par. 3-2.8.

An electro-optical system reacts to the IR emissions emanating from jet engines. It offers accurately controlled burst positions, improved reliability, no degradation of effectiveness when fired low over waves, and extreme immunity to countermeasures when used in antiaircraft munitions. See par. 3-2.6 for additional discussion.

Downloaded from http://www.everyspec.com

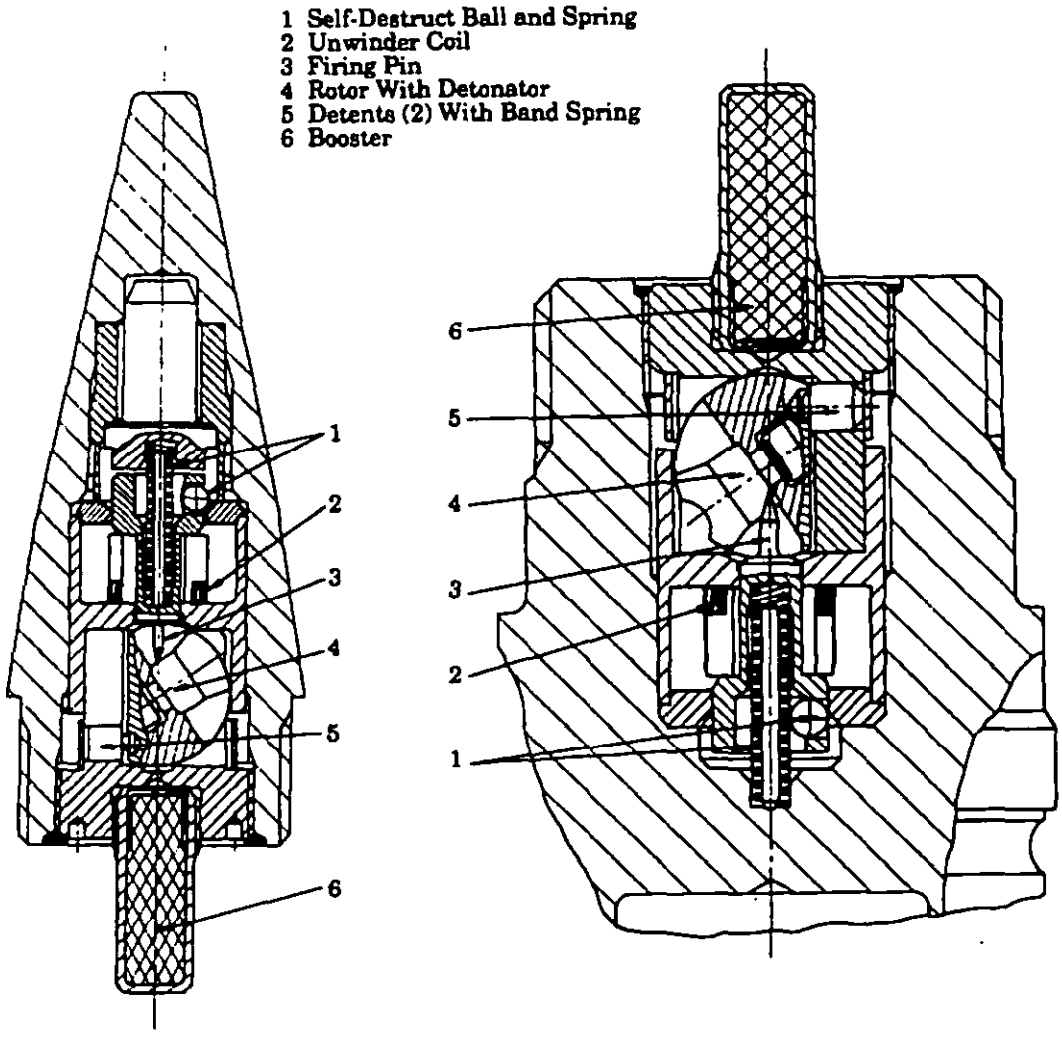

(A) Nose Fuze (B) Base Fuze

Reprinted with permission. Copyright © by Oerlikon Machine Works.

Figure 10-18. 35-mm Fuze, Oerlikon Design (Ref. 9)

10-8.2 M732 FUZE

The M732 fuze is an electronic RF proximity fuze known as a controlled variable time (CVT) fuze. One method of protection against ECM is to limit exposure time, i.e., the time during which the fuze is radiating. This is accomplished by using an electronic timer, settable before firing by hand rotation of the ogive, which is engraved around the periphery of the fuze shown in Fig. 10-20.

An extensive description of this fuze is contained in par. 1-5.4. Briefly, the fuze has an RF oscillator that contains an antenna, a silicon RF transistor, and other electronic components. The antenna pattern is designed to provide an optimum burst height over a wide range of approach angles. The amplifier contains an integrated circuit (IC) that has a differential amplifier, a second-stage amplifier with a full wave Doppler rectifier, transistors for the ripple filter, and a silicon-controlled rectifier (SCR) for triggering the fire-pulse circuitry.

The power supply, 30 V nominal at 100 mA load current, is a spin-activated battery. The electrolyte is sealed in a copper ampule, which is cut open on setback and allows distribution within the cells.

An electronic timer assembly to turn on the radiating phase is included as an IC variable duty-cycle multivibrator chopper that chops the resistor-capacitor (RC) charging curve and thereby permits a 150-s delay time. A ratiometer with finger contacts is rotated as the ogive is turned during setting.

The SAD usually is a standard system with the rotor held by setback and centrifugal detents, and the arming time is controlled with a runaway escapement giving a constant arming distance independent of muzzle velocity.

Downloaded from http://www.everyspec.com

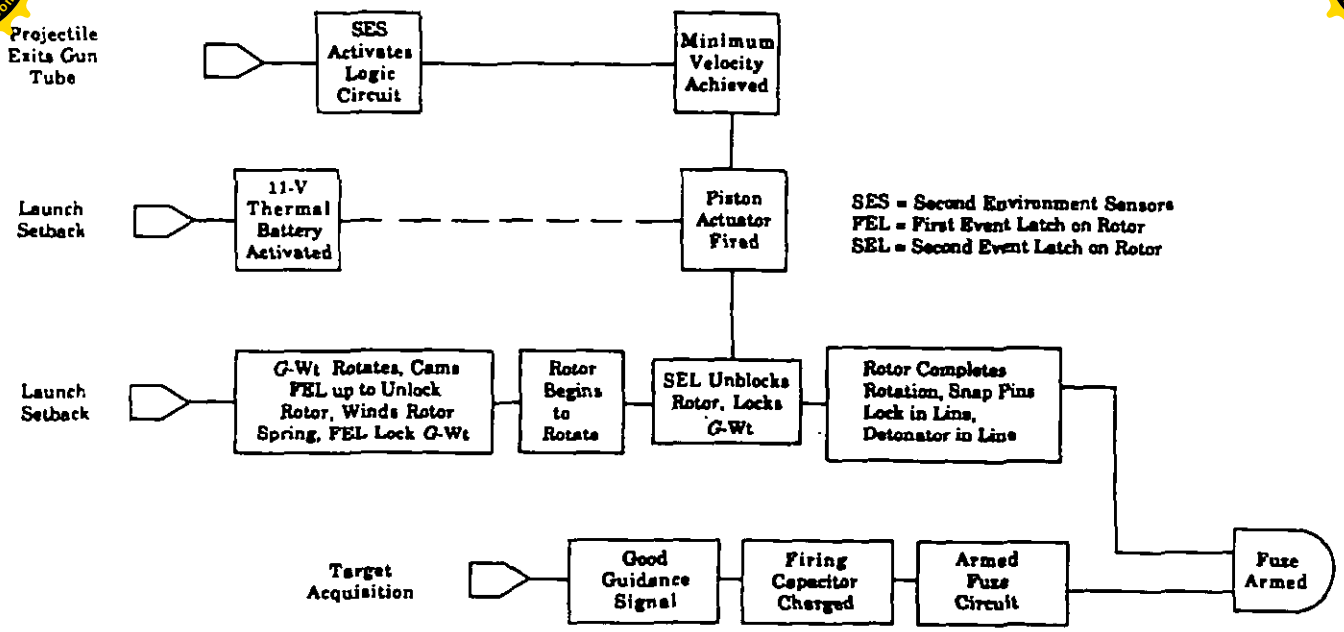

Figure 10-19. Block Diagram of M740 Fuze Arming Sequence

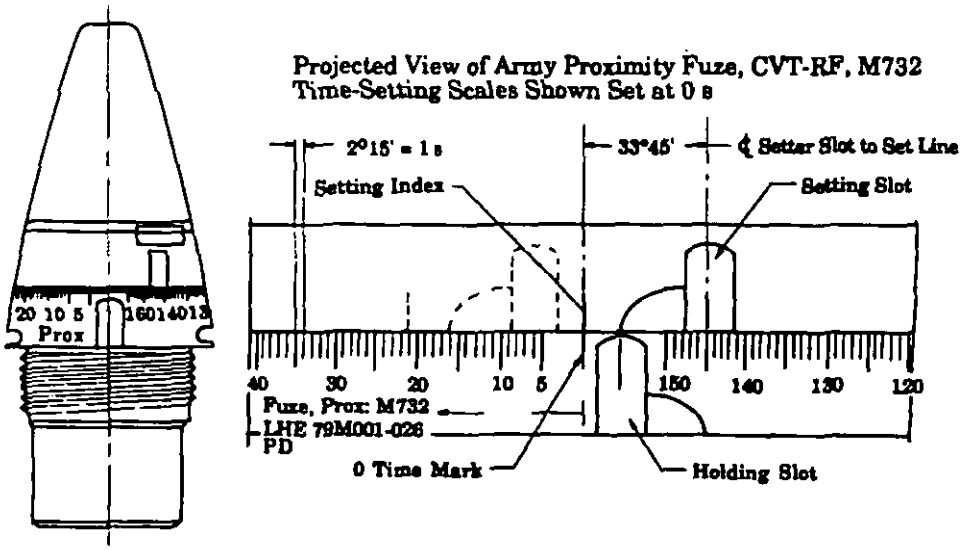

Figure 10-20. Fuze M732 (Ref. 10)

A PD backup mode is accomplished by means of a movable detonator carrier within the S&A mechanism. On impact the detonator in its carrier compresses an anticreep spring that allows the detonator to impale on a fixed firing pin.

10-9 SUBMUNITION FUZES

Improved conventional munitions (ICM) or cargo rounds—discussed in pars. 1-3.1, 1-3.1.1, 1-3.4, 1-3.4.2, 1-3.6, and 1-13—are the latest development in artillery rounds.

Fig. 10-21 depicts the cargo projectile M483 for the 155-mm howitzer. Its contents are the M42 shaped-charge, antivehicle grenade, shown in Fig. 1-26, with the M223 fuze, shown in Fig. 1-51.

The purpose of these rounds is to reduce the overkill of the conventional HE projectile by dispersing the energy. Target acquisition and lethality are also enhanced by the shotgun pattern on the target area.

The M42 submunition is explained in detail in par 1-3.6 and its fuze, the M223, in par. 1-13. The fuze is a simple arrangement of a slider/detonator out-of-line safety that is

Downloaded from http://www.everyspec.com

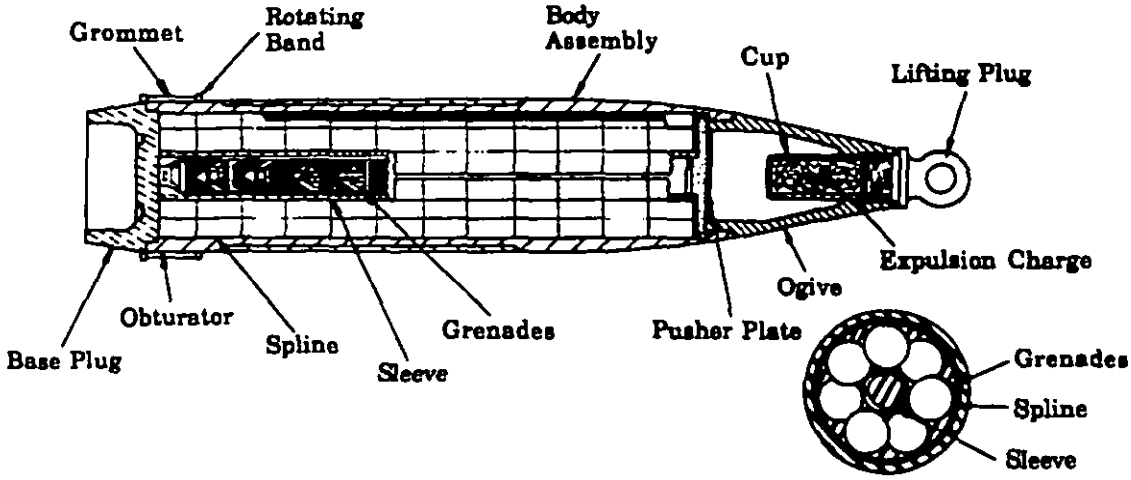

Figure 10-21. Projectile M483 With Submunition M-42 (Ref. 5)

spring loaded toward the armed position. It is held safe by a screw-bolt firing pin armed by means of a trailing ribbon that puts a drag on the bolt. The spinning grenade does the rest. The fuze fires on impact due to the inertia of the firing pin assembly.

REFERENCES

1. *Design Handbook, Springs, Custom Metal Parts*, Associated Spring, Barnes Group, Inc., Bristol, CT, 1970.
2. William E. Ryan, *Analysis and Designs: Rotary-Type Setback Leaf S&A Mechanisms*, Report TR-1190, Harry Diamond Laboratories, Adelphi, MD, 11 February 1964.
3. R. O. Nitzsche, *Effects of Parachute Delivery Requirements and Recent Drop Studies on Design of Fuze Mechanisms* (U), Paper No. 12, Second Fuze Symposium, Diamond Ordnance Fuze Laboratories (now Harry Diamond Laboratories), Adelphi, MD, 13 March 1966. (THIS DOCUMENT IS CLASSIFIED CONFIDENTIAL.)
4. L. K. Koeberle, and D. L. Overman, *Modular Ball and Helix Setback Mechanism*, HDL-2009-L Harry Diamond Laboratory, Adelphi, MD, August 1973.
5. TM 43-0001-28, *Artillery Ammunition Guns, Howitzers, Mortars, Recoilless Rifles, Grenade Launchers and Artillery Fuzes*, Department of the Army, April 1977.
6. *Survey of Mechanical Impact Devices for Use on Mechanical Time Fuzes*, Hamilton Watch Co., Contract No. DA-36-038-ORD-18508, June 1957.
7. *Fuze, MTSQ, M502A1*, Report MTF-8, Frankford Arsenal, Philadelphia, PA, January 1954.
8. MIL-HDBK-146, *Fuze Catalog Limited Standard, Obsolescent, Obsolete, Terminated and Cancelled Fuzes*, 1 October 1982.
9. *Oerlikon 35-mm Ammunition for Automatic Cannons*, Oerlikon Machine Tool Works, Zurich, Switzerland, 1980.
10. MIL-HDBK-145(A), *Active Fuze Catalog*, 1 January 1987.

Downloaded from http://www.everyspec.com

CHAPTER 11
FUZES LAUNCHED WITH LOW ACCELERATION

Munitions launched under conditions of low acceleration, i.e., less than 10,000 g, are addressed, and the launch environment of low acceleration coupled with long time duration and a general lack of spin is discussed. The operating accelerations of rockets, guided missiles, grenades, and mortar projectiles are categorized. Rockets are defined, in contrast to guided missiles, as free-flight missiles without guidance other than the initial aiming toward the target. Methods of guiding rockets, such as on-board intelligence, radio command from the launcher, or wire linkage, are presented. Arming environments for rocket safety and arming (S&A) mechanisms are discussed; airflow, rocket-motor gas pressures, and long duration acceleration are also discussed. The use of an electroexplosive device as a nonenvironmental lock is presented as a way to provide additional safety. Environmental sensing devices, such as the sequential leaf mechanism, drag sensor, zigzag mechanism, and fluidic generator, are discussed and their applications in several rocket fuze designs are illustrated. A general description of guided missile fuzing is given, and the frequent use of redundancy to ensure reliability is emphasized. The geometrical relationship of the sensor, the S&A mechanism, and the boostering systems in relation to the missile warhead is explained. A hypothetical design including the relevant equations for a missile fuze double-integrating mechanism is given. A specific surface-to-air missile, the PATRIOT, is described. The redundancy of its safety and arming devices (SAD) is explained as are the counterbalances introduced to militate against side accelerations during maneuvering. A command self-destruct (SD) feature, which is automatic in the event of control-signal loss, is presented. In addition, the use of rotary unlocking solenoids as a supplementary safety feature to the g sensors is shown. The HELLFIRE air-to-surface missile and its fuze, the M820, is included as an example of a simple system for small guided missiles. The lowest of the low-acceleration munitions is the hand grenade. The widely used pyrotechnic time fuze is presented, along with a more detailed explanation of an electrically fired impact fuze. Advantages and disadvantages of the two approaches are given. Design equations for the firing spring for both grenades are given. Methods of surface implanting both antiarmor and antipersonnel minefields are discussed: artillery, aerial, command, and towed dispensers. The ground-emplaced mine-scattering system (GEMSS) and the VOLCANO and ADAM fuzes are discussed. Submunition dispensing systems for use with projectiles, rockets, and airborne canisters are described. The purpose of the munitions and submunitions is discussed. Fuze M230 for the M73 submunition is used as an example.

11-0 LIST OF SYMBOLS

a = acceleration of the mechanism, g-units
a_1 = first new acceleration of the mechanism, m/s^2 (in./s^2)
a_2 = second new acceleration of the mechanism, m/s^2 (in./s^2)
d_w = diameter of wire, m (in.)
E = Young's modulus of elasticity, Pa (lb/in.^{2})
F_r = restraining force, N (lb)
F_s = initial tension on the slider, N (lb)
G = torque that is proportional to deflection $k\theta$, N·m (in.·lb)
g = acceleration due to gravity, m/s^2 (in./s^2)
H_s = potential energy, N·m (in.·lb)
I_A = second moment of cross-sectional area, m^4 (in.^{4})
k = spring constant, N/m (lb/in.)
ℓ = length of spring, m (in.)
r = lever arm of force F_v, m (in.)
r_s = radius arm of the striker that swings through π radians, m (in.)
S = distance, m (in.)
T_c = time constant, s
t = time, s
v_t = terminal velocity as t becomes infinite, m/s (in./s)
W = weight of the slider, N (lb)
x = displacement of slider, m (in.)
x_0 = initial displacement of slider, m (in.)
$\ddot{x}$ = acceleration, m/s^2 (in./s^2)
$\dot{x}$ = velocity, m/s (in./s)
θ = angular displacement of coil, rad

11-1 INTRODUCTION

Munitions with accelerations of less than 10,000 g may be classified together for the purpose of describing the force fields useful for arming. These munitions can be rockets, guided missiles (GMs), grenades, or some mortar projectiles. Rocket accelerations are classified in three ranges: up to 40 g, from 40 to 400 g, and from 400 to 3000 g. The last range is usually obtained by an assist, such as a gun-boosted rocket. Guided missiles generally have accelerations of less than 100 g, hand grenades have only a few g's, but propellant-launched grenades may experience accelerations up to 1000 g. The acceleration of mortar projectiles depends upon the amount of charge used.

The forces available to arm fuze components in munitions launched with low acceleration are smaller than those in high-acceleration projectiles. Fortunately, the time duration of this acceleration is comparatively long, from 2 to 4 s

Downloaded from http://www.everyspec.com

some rockets. Most munitions launched with low acceleration are fin-stabilized; hence centrifugal forces are not available for arming.

A differentiation will be made between rockets and guided missiles. In military use the term "rocket" describes a free-flight missile that is merely pointed in the intended direction of flight. On the other hand, "guided missiles" can be directed to their target while in flight by a preset or self-reacting device within the missile, by radio command to the missile, or by wire linkage to the missile. A "ballistic missile", although commonly grouped with guided missiles, is guided in the upward part of its trajectory but becomes a free-falling body in the latter stages of its flight through the atmosphere. In this case there is sufficient accuracy in conjunction with weapon yield to allow targeting of either soft or hard targets with an acceptable probability of destruction.

11-2 ROCKET FUZES AND SAFETY AND ARMING DEVICES (SAD)

Most rockets are fin stabilized; thus spin is not available as an arming environment. The designer must therefore resort to the use of other environments or nonenvironmentally operated features to achieve the desired level of safety. Other forces available to the designers of rocket fuzes are wind forces, gas pressure from the burning propellant, and creep (deceleration).

Early fin-stabilized rocket nose fuzes used wind-driven vanes for arming, which were unlocked by the forces of acceleration. The wind-vane fuzing systems, however, were susceptible to handling damage and the ingress of moisture. In some cases, a shroud surrounded the vane to protect it.

During burning of the rocket motor propellant, pressure from the resulting gases is exerted on the base of the rocket head. Since this pressure is fairly constant for a given rocket motor and since the magnitude is several hundred kilopascals (several hundred pounds per square inch), entrance of the gas into the fuze can be controlled and used to start, as well as to delay, the arming of a base fuze. Special design precautions are necessary to prevent the ingress of combustible products into the inlet orifice. This is usually accomplished by a wire mesh filter.

Most of the current stockpile of rocket fuzes—discussed in pars. 1-3.2 and 1-9—are entirely sealed, with no external pull pins or vanes, and use only acceleration as the arming environment. Generally, these acceleration double-integrating mechanisms have withstood the test of time as good discriminators among launch, handling, and accidental release shocks. One known exception is discussed in par. 6-4.9 along with the measure taken to overcome this deficiency. This example emphasizes the desirability of two independent safety features.

In addition to an acceleration sensor, newer rocket and missile fuzes use a second environmental sensor, such as a drag sensor, or a nonenvironmental lock, such as an electro-explosive device. The nonenvironmental lock is initiated by either on-board power, e.g., battery or generator, or a charge induced from external power sources, usually at launch.

11-2.1 THE 2.75-in. ROCKET FUZE FAMILY

Pars. 1-3.2.2 and 1-9.1 and Figs. 1-13, 1-45, and 2-6 describe the 2.75-in. rocket fuze, which has only one safety system, i.e., a mechanism operated by acceleration that is time governed by a runaway escapement. As noted, this mechanism is time proven and used in many fuzing systems; however, since it results in a single safety feature, it does not meet the safety provisions of MIL-STD-1316 (Ref. 1).

Par. 2-10 discusses the launch environment acceleration envelope for rocket fuzes. Table 2-2 gives the range of forces on rocket fuzes during launch and free flight. Low-acceleration aspects of rocket performance are covered in par. 5-3.2.2, and the ballistic environment of a rocket munition is depicted in Fig. 5-2. An acceleration versus arming-time curve for typical rocket accelerations in a temperature range of −18° to 60°C (0° to 140°F) is shown in Fig. 6-33.

Most fuzes for the 2.75-in. rocket family use a *g*-weight system, which is controlled by a runaway escapement. This SAD also protects against a short motor burn (Fig. 2-6). It returns the rotor to the safe position after cessation of the incomplete acceleration signature. The same action occurs during rough handling, including drops. The one exception is during parachute delivery with a fouled chute. Here again, a second environmental safety feature is desirable.

11-2.2 SAFETY AND ARMING DEVICE WITH DRAG SENSOR

Shoulder-launched high-explosive antitank (HEAT) rocket grenades use a base fuze with a nose trigger. The fuze employs a sequential leaf acceleration arming mechanism, which is discussed in par. 6-5.3, and a spring-armed rotor. Recently, fuze M754 has included a second environmental safety device in the form of a drag sensor. The drag sensor unlocks or locks the rotor depending upon the position of the rotor at the time of the onset or lack thereof of a 2- to 4-*g* drag force that endures for 4 ms. Fig. 11-1 depicts the sequence of operation of the drag safety system.

11-2.3 MULTIPLE LAUNCH ROCKET SYSTEM (MLRS) FUZE

The M445 fuze for the MLRS, shown in Fig. 1-11, is described in par. 1-9.2 and illustrated in Fig. 1-46. The two safety systems locking the unbalanced rotor are a zigzag setback mechanism, discussed in par. 6-4.6, and an electro-explosive switch. The switch is fired by voltage generated by ram air operated through a fluidic generator (par. 3-5.2.2). Fig. 11-2 is a block diagram of the operation of the M445 fuze, Fig. 11-3 shows the safety and arming (S&A) mechanism in the safe and armed positions, and the anti-

Downloaded from http://www.everyspec.com

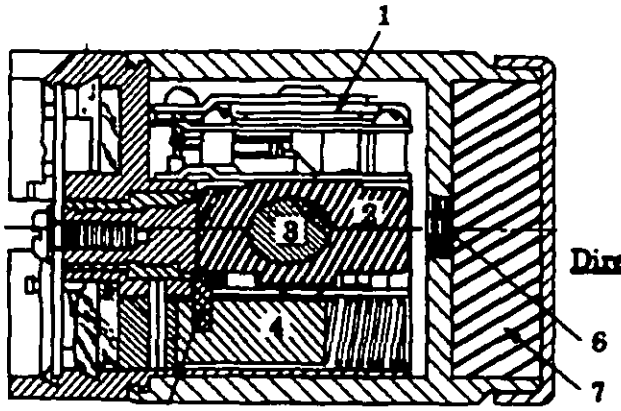

1 Sequential Leaf Mechanism
2 Rotor
3 Electric Detonator
4 Drag Sensor
5 Pin Interlocking With Rotor

Direction of Flight

6 Lead
7 Booster

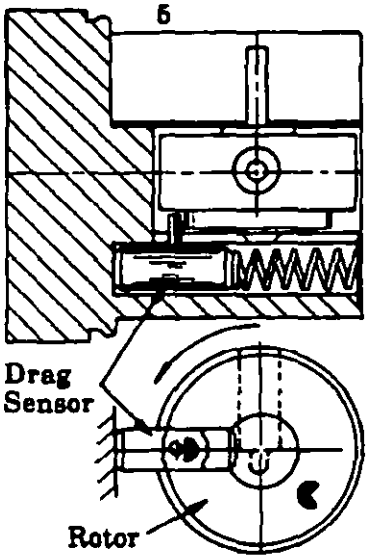

(A) Condition Prior to Launch

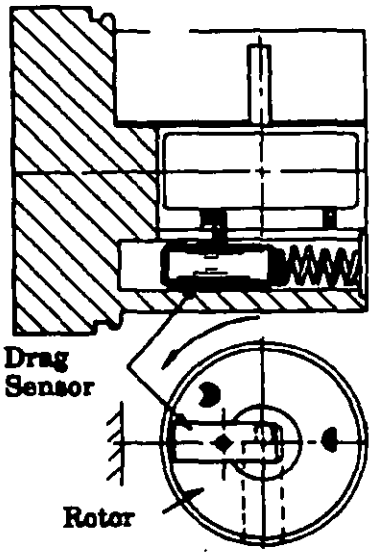

(B) Normal Launch (Drag Exceeds 4 g)

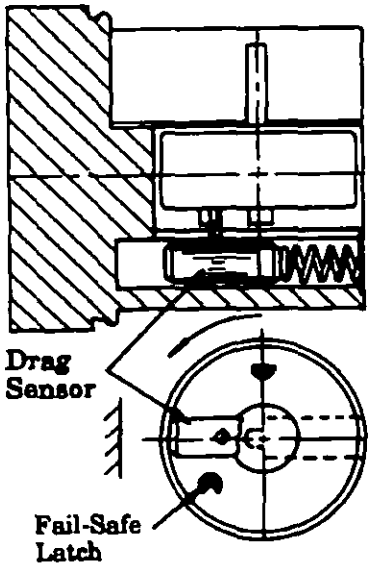

(C) Completion of Arming

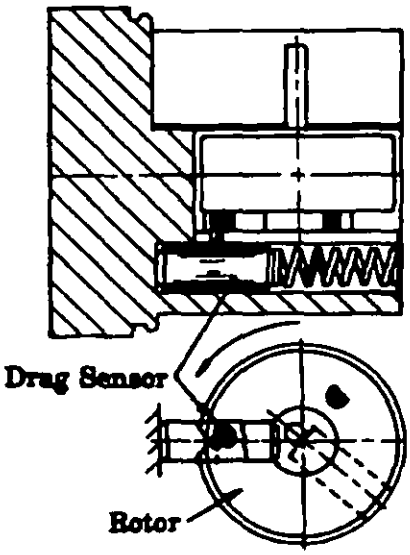

(D) Condition Following Release of Rotor Without Drag Signature (Rotor Locked in Fail-Safe Position)

Figure 11-1. M754 Fuze, Drag Sensor

Downloaded from http://www.everyspec.com

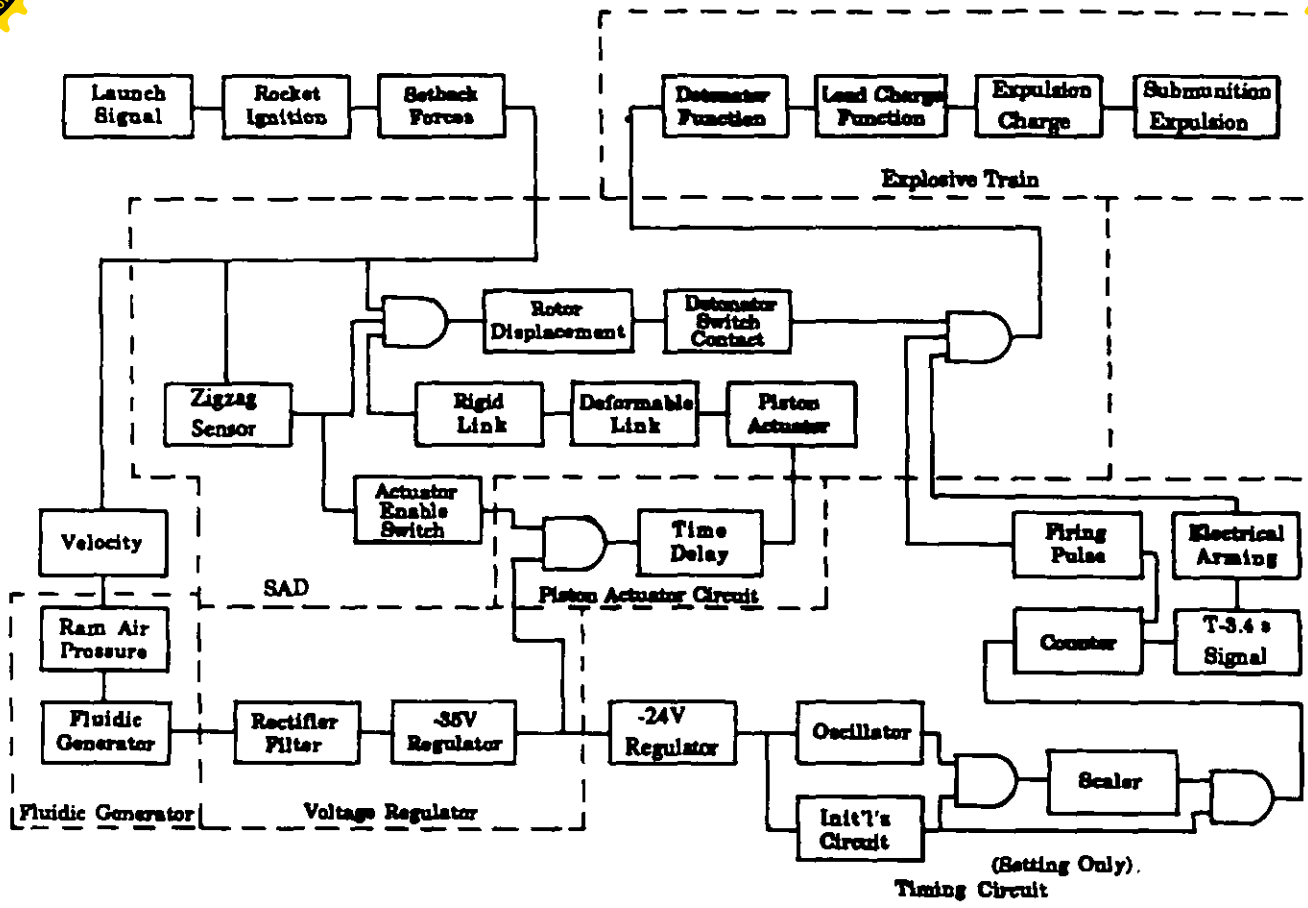

Figure 11-2. Block Diagram of M445 Fuze

malassembly link is shown in Fig. 11-4. Position A shows the lever in an interference position caused by an armed rotor; in this condition, installation of the S&A mechanism into the fuze is prevented. A status switch controlled by rotor rotation enables the fuze setter to distinguish between an armed and unarmed fuze. The fuze can be set only if unarmed prior to launch.

11-3 GUIDED MISSILE FUZES

Guided missile fuzes, as do other types of fuzes, contain an arming mechanism and an explosive train (Ref. 2). The various fuze components, however, may be physically separated from the warhead as well as from each other. The initiation sources may be separated from the S&A mechanism, which also may be separated from the warhead; the only connection between the two components may be a length of detonating cord or an electric cable. S&A mechanisms for missiles are discussed in Ref. 3.

The guided missile is a large, expensive item with a requirement for high functioning probability. Therefore, multiple fuzing is commonly employed since the probability of failure decreases exponentially. For example, one missile warhead detonating system may consist of two parallel S&A mechanisms, each containing a detonator. Then five lengths of detonating cord fitted with PETN relay caps may connect the output of these mechanisms to three warheads. Only one of the multiple paths needs to be completed for successful missile operation.

Even though several of the fuzes previously described might operate in guided missiles, the firing conditions warrant designs peculiar to missiles alone. At the present time, most missiles are limited to an acceleration of about 60 *g*; therefore, the arming mechanism must be designed to operate within this acceleration. The launch of some small guided missiles, such as TOW, produces an acceleration of 390 *g*, but the fuze requires only 21-*g* acceleration to arm.

The environment most widely used in both rocket and guided missile SADs is the acceleration imparted to the weapon during boost. Since the magnitude of this acceleration is comparable to the magnitude of the acceleration experienced in handling or accidental drops, however, the safety mechanism usually requires that this acceleration be sustained for a major portion of the boost time. In other words, the safety mechanism completes its function only after a minimum impulse has been imparted to the missile. Other versions of this type of S&A mechanism perform an

Downloaded from http://www.everyspec.com

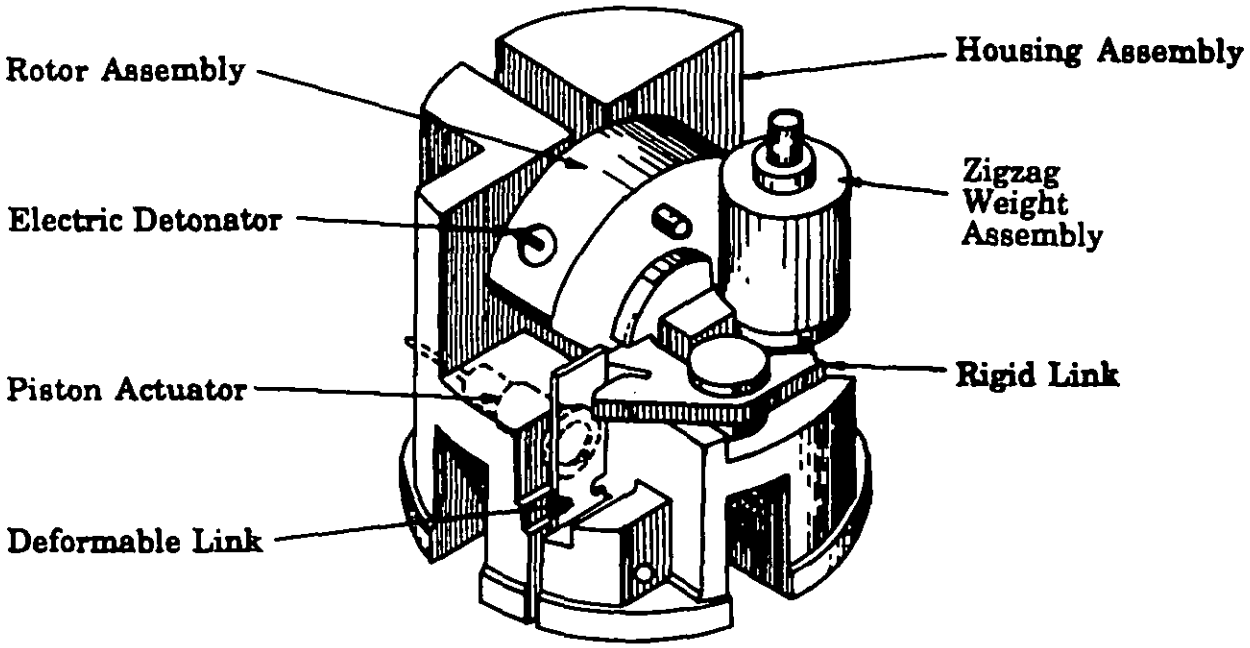

(A) Safe Position

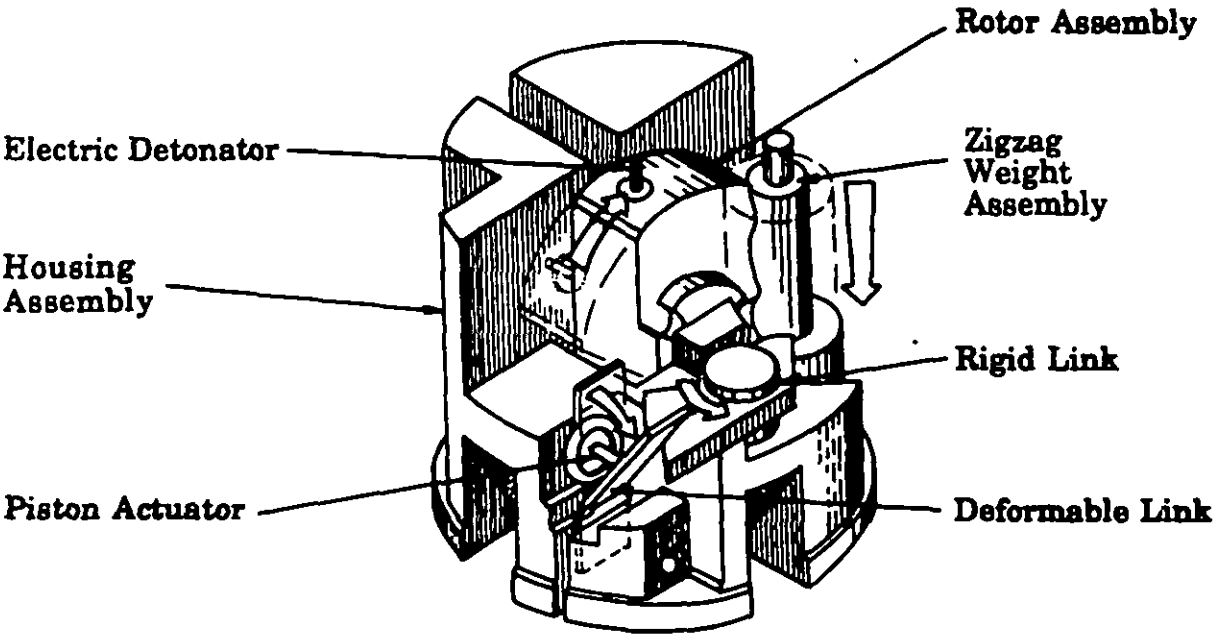

(B) Armed Position

Figure 11-3. M445 Fuze Safety and Arming Device; Safe Position and Armed Position