The bending moment pattern derived for lateral static force can be considered to give a reasonable representation for moment demands during the first mode of vibration of the frame. Higher mode effects significantly change these moment patterns, particularly in the upper stories of frames with long fundamental periods of vibration. To allow for such dynamic effects, the moments resulting from lateral static forces must be increased further if, as intended, column hinging above level 1 is to be avoided. This is achieved by the dynamic moment magnification factor ω. Hence to ensure that column plastic hinges do not form in frames above level 1, elastic analysis results, M_E, must be amplified in accordance with the relationship

$$M_u = \omega \phi_o M_E$$

where ϕ_o represents the effects of flexural overstrength of plastic hinges in the beams as finally detailed, and ω accounts for the dynamic amplification of column moments. While the factor ϕ_o was examined in detail in Sections 1.3.3(f), 4.5.1(f), and 4.6.3(a), the factor ω is considered in the following sections.

In the evaluation of the suggested values of the dynamic moment magnification factor ω, three points were considered in particular:

1. With the exception of the topmost story, the formation of a column story mechanism, involving column hinge development simultaneously at the top and bottom of columns of the story, is to be prevented.
2. With the exception of the column base at ground floor (level 1 or foundation level) and in the top story, hinge formation in columns should be avoided. If this can be achieved, considerable relaxation in the detailing requirements for the end regions of columns, with respect to confinement, shear strength, and bar splicing, may be made at all other levels.
3. Under extreme circumstances, overloading and hence yielding of any column section during the inelastic dynamic response of the framed building can be tolerated. Column yielding and hinge development are not synonymous in the context of seismic design. The latter involves ductility demands of some significance and usually necessitates hinge development at one end of all columns in a story. As long as some of the columns of a story can be shown to remain elastic, all other columns will be protected against ductility demands of any significance, unless adjacent beam hinges do not develop.

(a) Columns of One-Way Frames The dynamic moment magnification for such columns may be estimated with

$$\omega = 0.6T_1 + 0.85 \qquad (4.25a)$$

provided that

$$1.3 \leq \omega \leq 1.8 \tag{4.25b}$$

where T_1 is the computed fundamental period of the framed structure in seconds, as evaluated, for example, by Eq. (2.24).

When earthquake forces in the direction transverse to the plane of the frame is resisted predominantly by structural walls, the columns may be considered as part of a one-way frame.

(b) Columns of Two-Way Frames Such frames should be considered under simultaneous attack of earthquake forces along the two principal directions of the system. This normally involves analysis of column sections for biaxial bending and axial load. The concurrent development of plastic hinges in all beams framing into a column, as shown in Fig. 4.46(*d*), should also be taken into account. It should be noted that this does not imply simultaneity of maximum response in two orthogonal directions, since plastic hinges may form in beams at comparatively small levels of seismic attack, albeit with low ductility demand. Assessment of concurrency effect, however, may become an involved process. For example, at an interior column, supporting four adjacent beams, the interrelationship of the strengths of up to four adjacent plastic hinges, ranging from probable strength to flexural overstrength, and the interdependence of the dynamic magnification of moments at column ends above or below the beam in the two principal directions would need to be estimated. The probability of beam flexural overstrength development with extreme dynamic magnification being present at a section concurrently in both directions is considered to diminish with the increased number of sources for these effects.

To simplify the design process and yet retain sufficient protection against premature yielding in columns of two-way frames, dynamic moment magnification will be increased so as to allow the column section to be designed for unidirectional moment application only. Columns so designed, separately in each of the two principal directions, may then be assumed to possess sufficient flexural strength to resist various combinations of biaxial flexural demands. This may be achieved by use of dynamic moment magnification of

$$\omega = 0.5T_1 + 1.1 \tag{4.26a}$$

with the limitations of

$$1.5 < \omega < 1.9 \tag{4.26b}$$

Values for the dynamic moment magnificationfactor are given for both types of frames in Table 4.3. The minimum value of $\omega = 1.5$ for two-way frames results from consideration that a column section should be capable of sustaining simultaneous beam hinge moment inputs at overstrength from two

TABLE 4.3 Dynamic Moment Magnification Factor ω

	Period of Structure, T_1 (s)									
Type of Frame	< 0.7	0.8	0.9	1.0	1.1	1.2	1.3	1.4	1.5	> 1.6
One-way	1.30	1.33	1.39	1.45	1.51	1.57	1.63	1.69	1.75	1.80
Two-way	1.50	1.50	1.55	1.60	1.65	1.70	1.75	1.80	1.85	1.90

directions, corresponding with the moment pattern predicted by the initial elastic analysis. Analysis shows that a square column section, subjected to a moment along its diagonal, is only about 90% as efficient as for moment action along the principal directions. To allow for this, the approximate minimum value of ω, to allow for concurrent seismic action only, becomes $\omega = \sqrt{2}/0.9 \approx 1.5$. The relationship will be somewhat different for other column sections, but this approximation may be considered as being a reasonable average allowance for all columns of a story.

The probability of concurrence of large orthogonal moments at one column section due to responses in the higher mode shapes diminishes with the lengthening of the fundamental period. Therefore, the allowance for concurrent moment attack in Eq. (4.26) gradually reduces with the increase of the fundamental period, in comparison with the values given by Eq. (4.25).

(c) Required Flexural Strength at the Column Base and in the Top Story As discussed in Section 4.6.3(*b*), hinge formation at the base of columns, possibly with significant ductility demand, is to be expected, and hence this region will need to be detailed accordingly. To ensure that the flexural strength of the column sections at the base in two-way frames is adequate to sustain at any angle an attack of code force intensity, the unidirectional moment demand should logically be increased by approximately 10%. Similar considerations apply to the top store. Accordingly, the appropriate value of ω at the column base and for the top story should be.

For columns of one-way frames: $\omega = 1.0$

For columns of two-way frames: $\omega = 1.1$

(d) Higher-Mode Effects of Dynamic Response In terms of moment magnification, higher mode effects are more significant in the upper than in the first few stories above the column bases. To recognize this, Eqs. (4.25) and (4.26) are intended to apply only to levels at and above 0.3 times the height of the frame, measured from the level at which the first-story columns are considered to be effectively restrained against rotations. This level is normally at ground floor or at the foundations, depending on the configuration of the basement. In the lower 30% of the height, a linear variation of ω may be

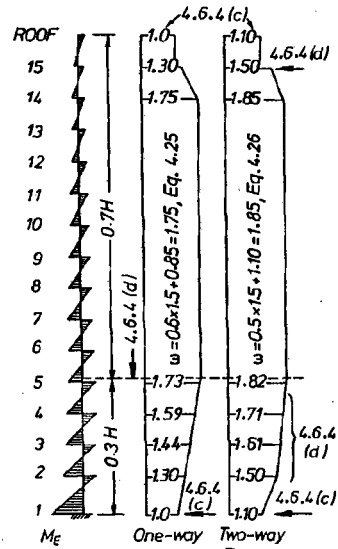

Fig. 4.22 The evaluation of dynamic moment magnification factor ω for two 15-story example columns.

assumed. However, at level 2 ω should not be taken less than the minima required by Eq. (4.25*b*) or (4.26*b*), respectively. At the soffit of the beams at the floor immediately below the roof, the value of ω may be taken as 1.3 for one-way frames and 1.5 for two-way frames.

The interpretation of the suggested rules for the estimation of the dynamic moment magnification factor ω, as set out above, is shown in Fig. 4.22 separately for 15-story one- and two-way frames, each with an assumed fundamental period of 1.5 s and a given moment pattern that resulted from the elastic analysis for lateral static forces. The arrows shown in this figure refer to the appropriate section number in the text.

(e) ***Columns with dominant Cantilever Action*** Columns with moment patterns such as shown in Fig. 4.23 require special consideration. Over the stories in which, because of dominant cantilever action (i.e., flexible beams), points of contraflexures are not indicated by the elastic analysis, critical moments are not likely to be affected significantly by the higher modes of dynamic response. In such columns the value of ω may be taken as the minima at first-floor level (i.e., 1.3 or 1.5 as applicable) and then linearly increased with height to the value obtained from Eq. (4.25) or (4.26), as appropriate, at the level immediately above the first point of contraflexure indicated by the analysis. This provision is less stringent than that shown for the lower stories in Fig. 4.22, when the first point of contraflexure appears

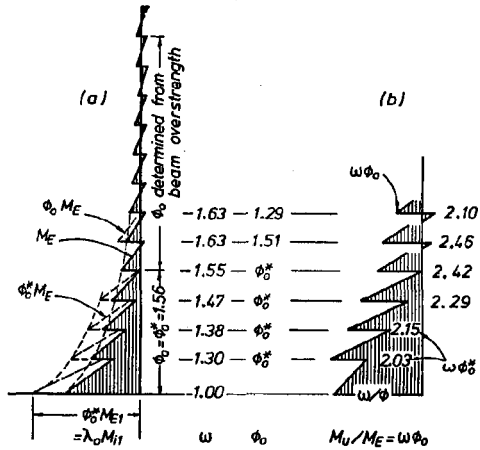

Fig. 4.23 Moment magnifications in the lower stories of a column of a 13-story one-way frame dominated by cantilever action.

above a floor that is further than 0.3 times the height above column base level. The intent of these provisions is to ensure that plastic hinges in cantilever-action-dominated columns will occur at the base and not in one of the lower stories. Specific values of ω, so derived for an example column, are shown in Fig. 4.23, where it was assumed that $\phi_o^* = 1.56$.

4.6.5 Column Design Moments

(a) Column Design Moments at Node Points The magnified moments at the centers of beam–column joints are obtained simply from $\omega\phi_o M_E$, where ω and ϕ_o are calculated in accordance with Sections 4.6.3 and 4.6.4. Except at level 1 and the roof, the magnification by ϕ_o is intended to apply to column moments M_E, in each story as shown in Fig. 4.22. However, only end moments are magnified by ω. These two steps are illustrated for a column in Fig. 4.24. The design moments at the top and bottom ends so obtained in this column will not occur simultaneously.

The application of this moment magnification in the lower stories of the example column in the 15-story two-way frames, referred to in Fig. 4.22, is shown in Fig. 4.25. The numerical values of ϕ_o are those assumed to have resulted from the overstrengths of the beams as designed.

A similar example for the lower stories of the column of a one-way frame, dominated by cantilever action, as discussed in Sections 4.6.3(*d*) and 4.6.4(*e*),

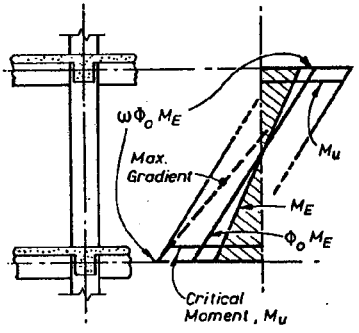

Fig. 4.24 Moment magnifications in an upper-story column.

is shown in Fig. 4.23(*b*). A period $T_1 = 1.3$ s was applicable to this building and hence for the upper levels, from Table 4.3, $\omega = 1.63$.

(b) Critical Column Section The critical column section to be designed is close to the top or the soffit of the beams. Accordingly, the centerline column moments should be reduced when determining the longitudinal reinforcement requirements. However, the gradient of the moment diagram is unknown, because it is not possible to determine what the shear force might be when the locally magnified moment is being approached during an earthquake. To be conservative, it may be assumed that only 60% of the critical shear V_u, to be examined in Section 4.6.7, will act concurrently with the design moment. Hence the centerline moments, such as shown in Fig. 4.24,

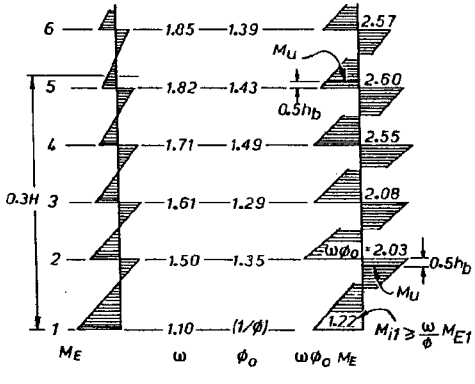

Fig. 4.25 Moment magnifications for a column in the lower stories of a 15-story two-way frame.

can be reduced by $\Delta M = 0.6(0.5h_bV_{col})$, where h_b is the depth of the beam. Consequently, the critical design moment M_u, shown in Fig. 4.24, to be used together with the appropriate axial load P_u and strength reduction factor $\phi = 1.0$, for determination of the ideal strength of sections at the ends of columns is

$$M_u = \phi_o \omega M_E - 0.3h_bV_u \tag{4.27}$$

where the value of V_u is that derived in Section 4.6.7 for the particular story. Equation (4.27) will need to be evaluated separately for each of the two principal directions for two-way frames.

(c) ***Reduction in Design Moments*** When yielding only in a small number of all columns in a story would result, a reduction of design moments should be acceptable. This is particularly relevant to columns that are subjected to low axial compression or to net axial tension, because in such columns the required flexural reinforcement might be rather large. Such columns are like vertical beams, and hence will be very ductile. Therefore, the shedding of moment from critical ends, necessitating some curvature ductility demand, will be associated with moderate concrete strains in the extreme compression fiber of the section affected. The larger the axial tension, the more moment reduction should be acceptable. Also, when design moments are large because of large dynamic magnification, larger local column strength reduction should be accepted. To achieve this, it is suggested that when the total design axial compression P_u on a column section does not exceed $0.1f_cA_g$, the design moment may be reduced, if desirable for economic reasons, so that

$$M_{u,r} = R_m(\phi_o \omega M_E - 0.3h_bV_u) \tag{4.28}$$

where the reduction factor R_m should not be less than that given in Table 4.4, and where P_u is to be taken negative if causing tension, provided that the following criteria are also satisfied:

1. In selecting R_m in Table 4.4, the value of P_u/f'_cA_g should not be taken less than -0.15 nor less than $-0.5\rho_t f_y/f'_c$. The second requirement is intended to prevent excessive moment reduction in columns with small total steel content $\rho_t = A_{st}/A_g$, when the axial tension exceeds $0.5f_yA_{st}$.
2. The value of R_m taken for any one column should not be less than 0.3. Thus up to 70% moment reduction is recommended when other criteria do not restrict it.
3. The total moment reduction, summed across all columns of a bent, should not be more than 10% of the sum of the unreduced design moments as obtained from Eq. (4.27) for all columns of the bent and taken at the same level. This is to ensure that no excessive story shear

TABLE 4.4 Moment Reduction Factor R_m

	P_u/f'_cA_g										
ω^a	−0.150	−0.125	−0.100	−0.075	−0.050	−0.025	0.000	0.025	0.050	0.075	0.100
1.0	1.00	1.00	1.00	1.00	1.00	1.00	1.00	1.00	1.00	1.00	1.00
1.1	0.85	0.86	0.88	0.89	0.91	0.92	0.94	0.95	0.97	0.98	1.00
1.2	0.72	0.75	0.78	0.81	0.83	0.86	0.89	0.92	0.94	0.97	1.00
1.3	0.62	0.65	0.69	0.73	0.77	0.81	0.85	0.88	0.92	0.96	1.00
1.4	0.52	0.57	0.62	0.67	0.71	0.76	0.81	0.86	0.90	0.95	1.00
1.5	0.44	0.50	0.56	0.61	0.67	0.72	0.76	0.83	0.89	0.94	1.00
1.6	0.37	0.44	0.50	0.56	0.62	0.69	0.75	0.81	0.88	0.94	1.00
1.7	0.31	0.38	0.45	0.52	0.59	0.66	0.73	0.79	0.86	0.93	1.00
1.8	0.30	0.33	0.41	0.46	0.56	0.63	0.70	0.78	0.85	0.93	1.00
1.9	0.30	0.30	0.37	0.45	0.53	0.61	0.68	0.76	0.84	0.92	1.00
	Tension							Compression			

[a] ω is the local value of the dynamic moment magnification factor applicable to the column section considered.

carrying capacity is lost as a consequence of possible excessive moment reduction in columns. Normally, moment from an inelastic column could be transferred to others, in accordance with the principles of moment redistribution. However, column design is being considered when a beam sway mechanism in a subframe, such as shown in Fig. 4.10, has already developed. Moments possibly transferred to a stronger column of the bent can no longer be equilibrated by adjacent beams. Thus the moment reductions, suggested by Eq. (4.28), normally means strength loss. Because at this stage all actions are being considered in the bent, with all possible beam hinges being at overstrength (i.e., at least ϕ_o times code design force level), 10% loss of strength in the bent is acceptable.

The interpretation of this third limitation is shown in Fig. 4.26. If, for example, the design moment M_{u1} in the tension column is to be reduced, the reduction ΔM_{u1} must be such that

$$\Delta M_{u1} = (1 - R_m)M_{u1} \leq 0.1(M_{u1} + M_{u2} + M_{u3} + M_{u4}) \qquad (4.29)$$

where each of these four column moments was determined with Eq. (4.27). Such moment reduction will allow outer columns in symmetrical frames, such as shown in Fig. 4.26, to be designed in such a way that the requirements for reinforcement for the tension case (column 1) will not be much different from that of the compression (column 4) case.

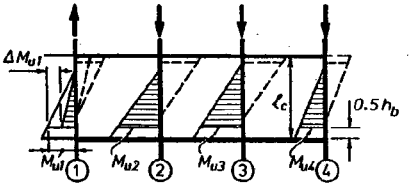

Fig. 4.26 Reduction of design moments in tension columns.

4.6.6 Estimation of Design Axial Forces

To be consistent with the principles of capacity design, the earthquake-induced axial load input at each floor should be V_{Eo} the seismic shear force induced by large seismic motions in the adjacent beam or beams at the development of their flexural overstrengths, as described in Section 4.5.3(a). The summation of such shear forces above the level under consideration, as shown in Fig. 4.27, would give an upper-bound estimate of the earthquake-induced axial column force. It should be recognized, however, that with an increasing number of stories above the level to be considered, the number of beam plastic hinges at which the full flexural overstrength will develop is likely to be reduced, as shown, for example, in the moment patterns of Fig. 4.21. This axial force, used together with the appropriately factored gravity loads and the design moments and shears to determine the strength of the critical column section, is then simply

$$P_{Eo} = R_v \Sigma V_{Eo} > P_E \tag{4.30}$$

where ΣV_{Eo} is the sum of the earthquake-induced beam shear forces from all floors above the level considered, developed at all sides of the column,

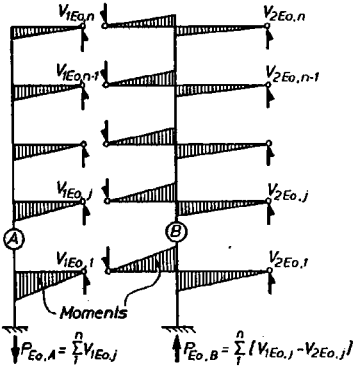

Fig. 4.27 Maximum possible column axial forces due to seismic actions at flexural overstrength of all beams.

TABLE 4.5 Axial Load Reduction Factor R_v

Number of Floors Above the Level Considered	Dynamic Magnification Factor, ω^a					
	1.3 or less	1.5	1.6	1.7	1.8	1.9
2	0.97	0.97	0.96	0.96	0.96	0.95
4	0.94	0.94	0.93	0.92	0.91	0.91
6	0.91	0.90	0.89	0.88	0.87	0.86
8	0.88	0.87	0.86	0.84	0.83	0.81
10	0.85	0.84	0.82	0.80	0.79	0.77
12	0.82	0.81	0.78	0.76	0.74	0.72
14	0.79	0.77	0.75	0.72	0.70	0.67
16	0.76	0.74	0.71	0.68	0.66	0.63
18	0.73	0.71	0.68	0.64	0.61	0.58
20 or more	0.70	0.68	0.64	0.61	0.57	0.54

[a] ω is given by Eqs. (4.25) and (4.26).

taking into account the beam overstrengths and the appropriate sense of the shear forces. Values of R_v are given in Table 4.5.

In summing the beam shear forces at the column faces, strictly, all beams in both directions should be considered. In general, this step may be ignored at interior columns when the beam spans on either side of a column in each orthogonal frame are similar. This is because earthquake-induced axial forces are likely to be very small in such columns compared with the gravity-induced compression. However, for outer columns and corner columns in particular, a significant increase in axial force will result from skew earthquake attack, and this should be considered. When dynamic magnifications in the two principal directions of a structure are different, the larger of the values of ω, relevant to the level under consideration, may be taken in obtaining R_v from Table 4.5 to evaluate the axial force due to concurrent earthquake actions. Note that the higher dynamic amplification factors applicable to two-way frames ensures that the R_v factor will be lower than for equivalent one-way frames. This provides some recognition of the further reduced probability of beam hinging at all levels in both directions for a two-way frame.

4.6.7 Design Column Shear Forces

(a) Typical Column Shear Forces In all but the first and top stories the shear force can be estimated from the gradient of the bending moment along the column. The minimum shear force to be considered is ϕ_o times the shear

derived from the elastic analysis for code forces, V_E. This is evident from the gradient of the $\phi_o M_E$ diagram in Fig. 4.24. An allowance, however, should also be made for a disproportionate distribution of beam moments between the columns above and below a beam, giving a somewhat larger gradient than implied by the elastic analysis moment pattern. A 20% increase of moment gradient, as shown in Fig. 4.24, is appropriate. Finally, the more serious consequences of a shear failure, also recognized by the magnitudes of strength reduction factors recommended [A1] for flexure ($\phi = 0.9$) and shear ($\phi = 0.85$), should be taken into account. Hence it is recommended [X3] that the ideal shear strength of the column, in conjunction with the design axial load relevant to the direction of earthquake attack, should not be less than

$$V_u = 1.3\phi_o V_E \tag{4.31}$$

It is seen that with a typical average value of $\phi_o = 1.4$, the ideal shear strength of the column with $\phi = 1.0$ will need to be $1.8V_E$.

(b) Design Shear in First-Story Columns This must also be related to the flexural overstrength [Eq. (4.24)] of the potential plastic hinge at the column base, $\phi_o^* M_E^*$. If this overstrength is large, which may be the case when the axial compression load intensity is in excess of $P_i = 0.3f_c' A_g$ [Eq. (3.28) and Fig. 3.22], the moment gradient may well exceed that assumed for Eq. (4.31). Hence for these columns the following design shear force should also be considered:

$$V_u = \frac{\phi_o^* M_E^* + 1.3\phi_o M_{E,\,\text{top}}}{l_n + 0.5h_b} \tag{4.32}$$

where $M_{E,\,\text{top}}$ is the column moment at the centerline of the beam at level 2 with depth h_b, derived from code forces, and l_n is the clear height of the first-story column.

(c) Shear in Columns of Two-Way Frames Additional considerations are necessary because of the possibility of concurrent earthquake attack from two directions. The shear strength of symmetrically reinforced square columns has been found to be the same when subjected to shear load in any direction. If it is assumed that the strengths of the beams framing into such a column from two directions are the same, the principal induced shear force in the column in the direction of the diagonal could be $\sqrt{2}$ times the shear applied under unidirectional earthquake attack. By again considering the reduced probability of concurrence of all critical load conditions, such as measured by ϕ_o, ω, and the 20% increase in moment gradient, it is suggested that for all columns of two-way frames, in which plastic hinges cannot develop, instead

of using $\sqrt{2}$ times the value given by Eq. (4.31),

$$V_u = 1.6\phi_o V_E \tag{4.33}$$

and for first-story columns of two-way frames,

$$V_{\text{col}} = \frac{\phi_o^* M_E^* + 1.6\phi_o M_{E,\text{top}}}{l_n + 0.5h_b} \tag{4.34}$$

should be used to estimate the shear strength demand. These shear forces may be used while considering separately only unidirectional lateral forces in each of the two principal directions.

(d) Shear in Top-Story Columns When column plastic hinges may develop at roof level before the onset of yield in the roof beams, the column shear may be assessed the same way as in first-story columns using either Eq. (4.32) or (4.34), as appropriate. When top-story columns are designed to develop plastic hinges simultaneously at both ends, the design for shear becomes the same as for beams, outlined in Section 4.5.3(*a*).

4.6.8 Design Steps to Determine Column Design Actions: A Summary

To summarize the issues of the deterministic design approach presented in Section 4.6, and to illustrate the simplicity of what might first appear to be a complex procedure, a step-by-step application of the technique, as used in a design office, is given in the following.

Step 1: Derive the bending moments for all members of the frame for the specified lateral earthquake forces only, using an appropriate elastic analysis. M_E refers to moments so derived at the node points of the frame model.

Step 2: Superimpose the beam bending moments resulting from elastic analyses for the lateral forces and those for the appropriately factored gravity loading, or obtain the moments from both sources in a single operation. Subsequently, carry out moment redistribution for all beam spans in each bent in accordance with the principles given in Section 4.3.

Step 3: Design all critical beam sections to provide the necessary ideal flexural strength, and determine and detail the reinforcement for all beams of the frame.

Step 4: Compute the flexural overstrength of each potential plastic hinge, as detailed, for each span of each continuous beam for both directions of the applied lateral forces. Using bending moment diagrams or otherwise, determine the corresponding beam overstrength moments at each column center-

line (Fig. 4.18) and subsequently determine the beam seismic shear forces V_{Eo} in each span associated with these end moments, as outlined in Section 4.5.3(*a*).

Step 5: Determine the beam overstrength factor ϕ_o at the centerline of each column for both directions of the lateral forces acting on the frame, as explained in Section 4.6.3. ϕ_o factors are not applicable where plastic hinges in columns are expected, as at column bases and at roof level.

Step 6: From the fundamental period of vibration of the structure T_1, obtain the value of the dynamic magnification factor ω from Table 4.3. Consider one- and two-way frames separately, and observe the following exceptions:

(a) At the base and at roof level, $\omega = 1.0$ or $\omega = 1.1$ for one-way and two-way frames, respectively.
(b) At the soffit of beams at the level immediately below the roof, $\omega = 1.3$ and $\omega = 1.5$ for one- and two-way frames, respectively.
(c) At floors situated within the lower 30% of the total height H of the frame, the value of ω may be interpolated between the minimum values (1.3 or 1.5) at level 2 and the value obtained from Table 4.3, which is applicable at and above the level of $0.3H$ above the column base hinge level.
(d) For frames in which the analysis for lateral forces does not indicate a column point of contraflexure in a story, the minimum value of ω may be linearly increased to its full value, obtained from Table 4.3 at the floor immediately above the level were the first column point of contraflexure is indicated by analysis.

Step 7: Sum up all the earthquake-induced overstrength beam shear forces V_{Eo} from all floors from roof level down to level 1, as shown in Fig. 4.27, and determine at each floor $P_{Eo} = R_v \Sigma V_{Eo}$, where R_v is obtained from Table 4.5. Determine the design axial forces on the columns P_u at each floor for the appropriate load combinations: for example, $(D + L_R + E_o)$ or $(0.9D + E_o)$.

Step 8: The column design shear force V_u at a typical upper story is generally computed from Eq. (4.31) or (4.33), depending on whether the column is part of a one- or a two-way frame. For first-story columns, Eq. (4.32) or (4.34) need also be considered.

Step 9: The critical design moments for the columns at the top or the soffit of beams, to be considered together with the axial load P_u, obtained in step 7, are found from

$$M_u = R_m(\phi_o \omega M_E - 0.3h_b V_u) \tag{4.35}$$

For columns under low axial compression or subjected to axial tension, the column design bending moments obtained from Eq. (4.27) may be reduced by the factor R_m. Obtain the value of R_m from Table 4.4, and note that when $P_u/f'_c A_g \geq 0.10$, $R_m = 1.0$.

Note further that for all column sections where design actions have been derived from capacity design consideration (Sections 1.4 and 4.6.1 to 4.6.7) the necessary ideal strength is based on a strength reduction factor of $\phi = 1.0$ (Section 3.4.1). Thus in these regions $M_i \geq M_u$, $P_u \geq P_i$, and $V_i \geq V_u$. On the other hand, at sections where plastic hinges are expected (e.g., at the base of a column), the required strength for moment and axial load, M_u and P_u, is based only on code-specified combination of factored loads and forces (Section 1.3.2). Accordingly, the necessary ideal strength must be evaluated with use of strength reduction factors $\phi < 1.0$ listed in Table 3.1. Moment magnifications by the product $\omega\phi_o$ for columns, to be designed to remain essentially elastic at and above level 2, are compared in Figs. 4.23 and 4.25 with equivalent magnifications derived from strength design principles, applicable at the column base. Moments so magnified then give the minimum ideal flexural strength of critical column sections. The necessary longitudinal reinforcement may now be determined and the special detailing requirements considered.

4.6.9 Choice of Vertical Reinforcement in Columns

Because of drift limits, slender columns cannot be used for seismic-dominated ductile frames. Therefore, it is often found that columns are large enough to resist the specified earthquake forces with steel contents in the range $0.01 < \rho_t < 0.03$.

Either mild or high-strength steel may be used for column reinforcement. Generally, the latter ($f_y = 400$ MPa, U.S. grade 60) will be more economical. Above level 2 of a frame, the characteristics of the steel should not affect column response, because if designed in accordance with the outlined capacity design principles, plastic hinges should never develop. At the base of the first-story column, however, significant ductility demand must be expected. As explained in Sections 3.3.1(*b*), 4.6.3, and 4.6.7, the flexural overstrength of the column section must then be evaluated accordingly, to ensure that the column design shear V_u is not underestimated.

If bond limitations for beam bars passing through interior beam–column joints are to be satisfied, the depth of the column may need to be up to 30 times the diameter of the beam bars. Various issues relevant to the development of the strength of beam bars in beam–column joints are examined in Section 4.8.6. These criteria may govern the choice of column dimensions in medium-rise buildings. For example, approximately 750 mm (30 in.) will be required for the column depth if 22-mm (0.88-in.)-diameter bars [$f_y = 415$ MPa (60 ksi)] are to be used in the top of the beams of a two-way frame when