Advanced Materials Research Vol 216 (2011) pp 692-697 Online: 2011-03-15
© (2011) Trans Tech Publications, Switzerland
doi:10.4028/www.scientific.net/AMR.216.692

Modeling and Simulation of Direct Force Control for PMLSM

Xudong Wang[1,a], Haichao Feng[1,b], Xiaozhuo Xu[1,c] and Baoyu Xu[1,2,d]

[1]School of Mechanical & Power Engineering, Henan Polytechnic University, Jiaozuo 454000, China

[2]College of Mechanical & Electrical Engineering, Central South University, Changsha 410083, China

[a]wangxd@hpu.edu.cn, [b]fhc@hpu.edu.cn, [c]xxz@hpu.edu.cn, [d]xubaoyu@hpu.edu.cn

Keywords: permanent magnet linear synchronous motor (PMLSM); direct force control (DFC); modeling and simulation

Abstract: Direct force control (DFC) with the advantages of simple structure, fast force response, superior control performance, is developed from direct torque control (DTC). So, it is attracting more attention, increasingly becoming a research hot in the control field. It is a valuable research to improve the operation stability of PMLSM by the direct force control. In this paper, based on DFC principle analysis, the force control and flux control theory of DFC is studied according to the mathematical model of PMLSM. The structure and implementation method of DFC is analyzed, and then the DFC system simulation model for PMLSM is built by Matlab/Simulink. The simulation results show the feasibility of the simulation model, with good static and dynamic performance.

Introduction

Direct force control (DFC), which is a new control method specially applied to the linear motor, is developed based on direct torque control (DTC). In the same way, DFC can be used in PMLSM. For PMLSM DFC system, using primary field-oriented, the position information of mover isn't need because the primary flux linkage and force are the control variables. So, the PMLSM DFC system has fast force response [1~3].

During the operation of PMLSM, the primary magnetic circuit structure changes continuously along with varying of relative position of primary and secondary, which results in the change of motor parameters. Because of the nonlinearly between the electromagnetic parameters and the position of secondary, the accurate mathematical model of PMLSM is difficult to establish. So, it is difficult to achieve requirements of high performance control with conventional control methods [4, 5]. DFC is not sensitive to the change of motor parameters. It is a valuable research to improve the operation stability of PMLSM by the direct force control. In this paper, the thrust control and flux control theory of DFC is studied based on the principle of DFC and mathematical model of PMLSM. The simulation model of PMLSM DFC is built to validity the efficiency and feasibility.

Mathematical model of PMLSM

Coordinate system of PMLSM

In the *abc* coordinate system, it difficult to find a good control method due to the complexity of the AC motors model. In order to achieve the superior control performance on PMLSM as DC motor, the two-phase stationary $\alpha\beta$ coordinate system and the two-phase rotating dq coordinate system are used according to the vector decoupling control.

Mechanical movement equations

The mechanical movement equations of PMLSM is

$$Mpv = F_{em} - f_l - Bv \tag{1}$$

where, v is the speed of secondary, and M is the mover quality, and f_l is the load, and B is the viscous friction coefficient, and p is the differential operator.

All rights reserved. No part of contents of this paper may be reproduced or transmitted in any form or by any means without the written permission of Trans Tech Publications, www.ttp.net. (ID: 150.214.146.47, Universidad de Sevilla, USE/BTCA.General Universitaria, Sevilla, Spain-06/05/15,10:49:11)

Mathematical model in *dq* coordinate system

In *dq* coordinate system, the voltage equation and flux equation of PMLSM is

$$\begin{cases} u_d = R_s i_d + p\psi_d - \omega\psi_q \\ u_q = R_s i_q + p\psi_q + \omega\psi_d \\ \psi_d = L_d i_d + \psi_f \\ \psi_q = L_q i_q \end{cases} \tag{2}$$

where, u_d and u_q are the *d*-axis and *q*-axis voltage of primary winding; i_d and i_q are the *d*-axis and *q*-axis current; Ψ_d and Ψ_q are the *d*-axis and *q*-axis flux; R_s is the resistance; L_d and L_q are the *d*-axis and *q*-axis inductance; Ψ_f is the effective flux of permanent magnet; ω is the angular velocity.

In *dq* coordinate system, from Eq. 2, the state equation of PMLSM is

$$\begin{cases} pi_d = -R_s/L_d\, i_d + L_q/L_d\, \omega i_q + u_d/L_d \\ pi_q = -L_d/L_q\, \omega i_d - R_s/L_q\, i_q + u_q/L_q - \psi_f/L_q\, \omega \end{cases} \tag{3}$$

The electromagnetic force equation of PMLSM is

$$F_{em} = p_n \frac{3\pi}{2\tau}[\psi_f i_q + (L_d - L_q) i_d i_q] \tag{4}$$

If L_d=L_q=L_s, Eq. 4 can be expressed as

$$F_{em} = p_n \frac{3\pi}{2\tau}\psi_f i_q = p_n \frac{3\pi}{2\tau}\frac{1}{L_s}|\psi_s|\psi_f \sin\delta \tag{5}$$

where, p_n is the pole-pair, and Ψ_s is the flux of primary winding, and δ is the power angle.

Direct force control system of PMLSM

The following equation is got from the differential of Eq. 5.

$$\Delta F_{em} = p_n \frac{3\pi}{2\tau}\frac{1}{L_s}\psi_f |\psi_s| \cos\delta \cdot \omega\Delta t \tag{6}$$

It is obvious that the rate of change of force is proportional to the rate of change of power angle δ. The flux of secondary of PMLSM Ψ_f is determined by the permanent magnet, nothing to do with the primary flux Ψ_s. The electromagnetic force varies with the power angle. When the space vector of primary voltage leads the primary flux, the velocity of primary flux is greater than the velocity of secondary flux. So, electromagnetic force increases with the increase the of power angle. Contrarily, when the space vector of primary voltage lags the primary flux, the velocity of primary flux is less than the velocity of secondary flux, and then the electromagnetic force decreases due to the decrease of the power angle. The primary flux is stationary if the zero-voltage vector is applied, but secondary keeps running because of the inertia, which causes the decrease of the electromagnetic force with the decrease of the power angle. The power angle can be changed through the speed and direction variation of the primary flux.

If the direction of the force variation is the same as the power angle, keeping constant of the amplitude of the primary flux, the force of PMLSM can be controlled effectively by controlling the angle between primary flux and secondary flux. It is easy to get quickly force response by changing quickly the power angle.

Modeling of PMLSM DFC system

PMLSM Model

The PMLSM model is the core of the whole system. Combining with the mathematical model, the PMLSM simulation model is built through Matlab/Simulink, including the coordinate transformation block, the current balance block, and the mechanical motion balance block, shown in Fig. 1. The whole simulation model of PMLSM is got by the connection of each block, shown in Fig. 2. Then, the whole model is encapsulated for calling.

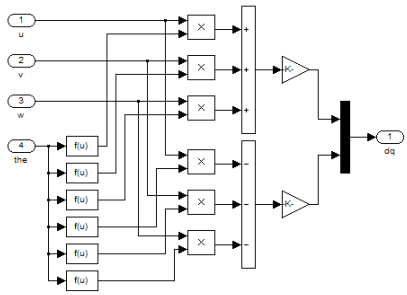

(a) Transformation from *ABC* to *dq*

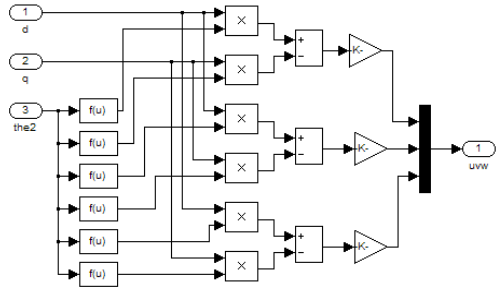

(b) Transformation from *dq* to *ABC*

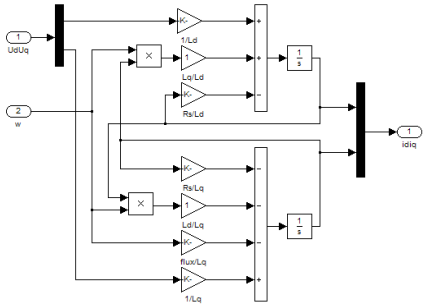

(c) Current balance block

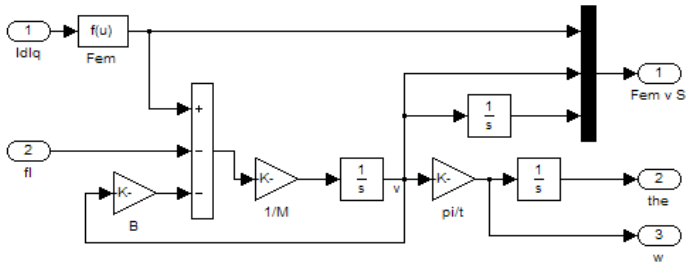

(d) Mechanical motion balance block

Fig. 1 Simulation model blocks of PMLSM

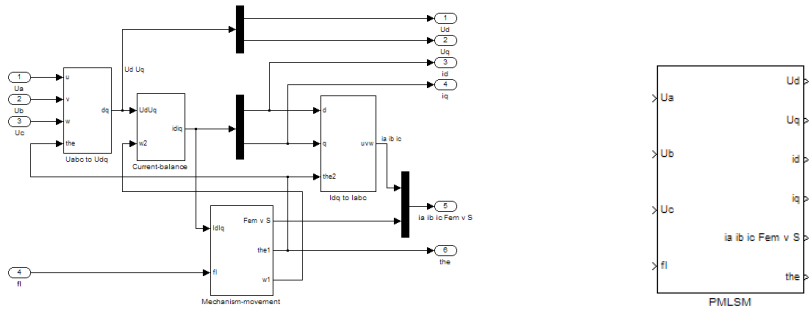

Fig. 2 Simulation model of PMLSM

Calculation of flux and thrust models

The calculation of flux and thrust need voltage $U_{\alpha\beta}$ and current $i_{\alpha\beta}$. In the $\alpha\beta$ coordinate system, the primary flux and the thrust can be described in the following equations.

$$\begin{cases} \psi_\alpha = \int (u_\alpha - i_\alpha R_s)dt \\ \psi_\beta = \int (u_\beta - i_\beta R_s)dt \\ \psi_s^2 = \psi_\alpha^2 + \psi_\beta^2 \end{cases} \tag{8}$$

$$F_{em} = \frac{3\pi}{2\tau} p_n (\psi_\alpha i_\beta - \psi_\beta i_\alpha) \tag{9}$$

From Eq. 8 and Eq. 9, the calculation of flux and thrust models are built, shown in Fig.3.

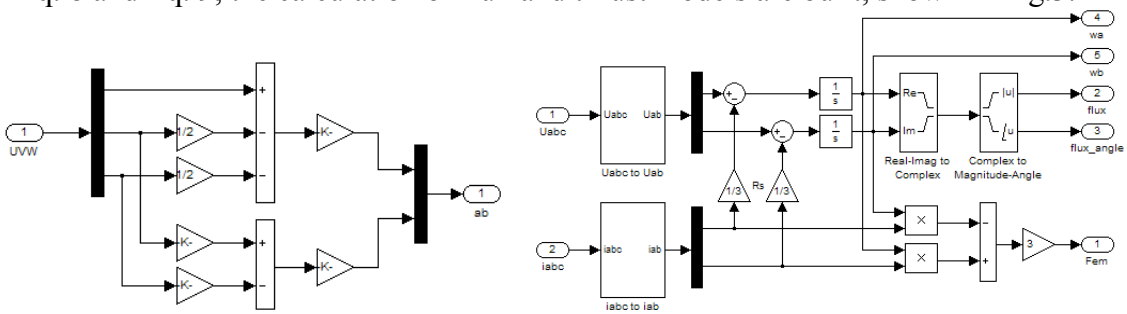

Fig. 3 Calculation models of the flux and thrust of PMLSM

Flux sector observer and switching table selection models

The flux sector observer model is used to determine the location of the primary flux, providing information of sector of the primary flux to the slection model of switching table, which supplys the appropriate voltage space vector to achieve the direct force control. The output signal of the switching table is the switching state of inverter. The flux sector observer and switching table selection models are shown in Fig. 4 and Fig. 5, respectively.

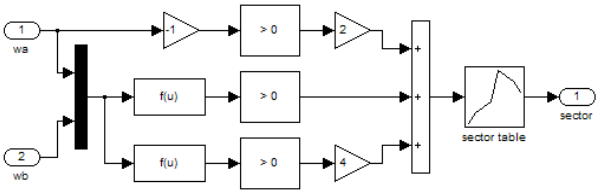

Fig. 4 Flux sector observer model

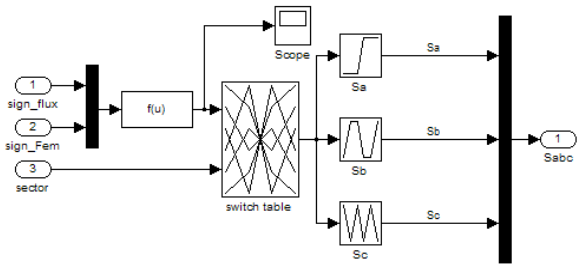

Fig. 5 Switching table selection model

Simulation model of PMLSM DFC

The simulation model of PMLSM DFC is got by the connection of each model, shown in Fig. 6.

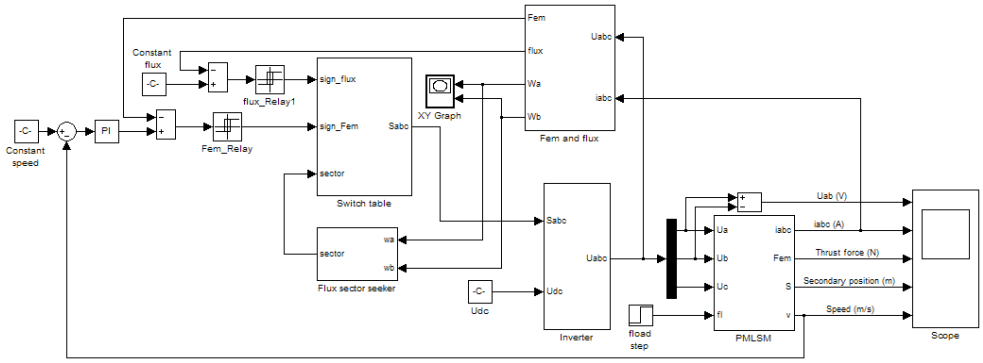

Fig. 6 The whole simulation model of PMLSM DFC

Simulation and analysis

A single-side long-secondary short-primary PMLSM with ψ_f=0.2324Wb, L_d=L_q=0.01391H, and n_p=3, is built for simulation. The given value of speed v* is 0.312m/s, and the given value of primary flux ψ_f* is 0.2324Wb. The simulation reseults are shown in Fig. 7 and Fig. 8. As the simulation results show that PMLSM DFC system has good static and dynamic performance.

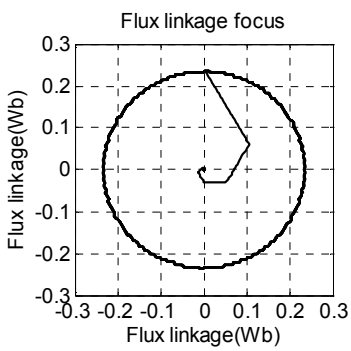

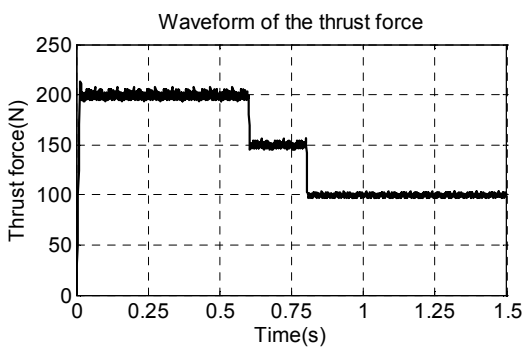

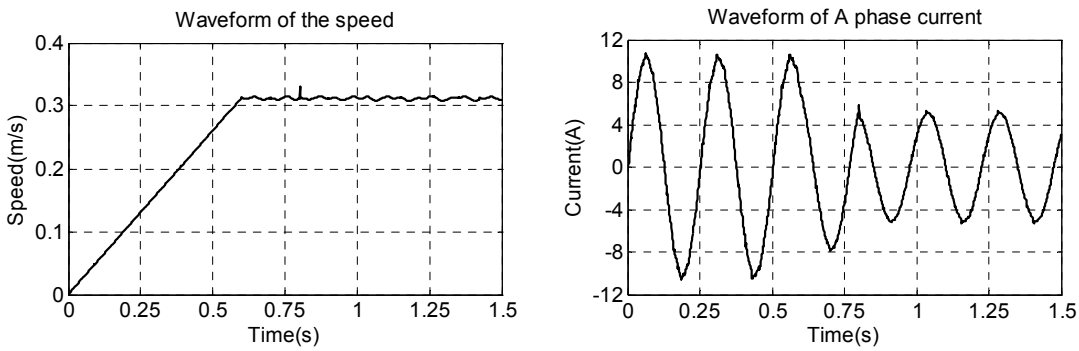

Fig. 7 Waveforms of the primary flux, force, speed, and A-phase current in the case of the load reducted from 150*N* to 100*N* at 0.8s

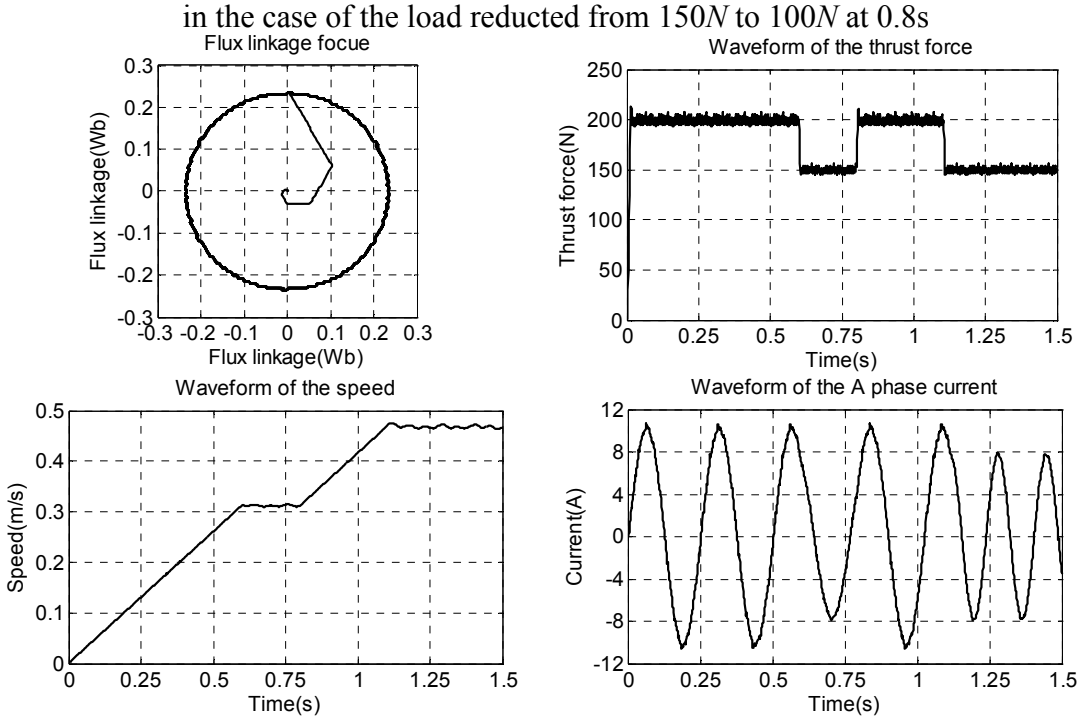

Fig. 8 Waveforms of the primary flux, force, speed, and A-phase current in the case of accelerating to 0.468m/s

Summary

In this paper, based on the mathematical model of PMLSM, simulation model of PMLSM DFC system is built, and two simulation conditions of load reduction and acceleration after load starting are set. The simulation results show the primary flux path is approximate circular state with the variation of the load and speed. Although fluctuation exists, force and speed can reach the given value quickly. The established simulation model is feasibility, shown good static and dynamic performance.

Acknowledgment

This work was supported by the National Natural Science Foundation of China (NO. 61074095), and Henan Outstanding Person Plan (NO. 104200510021), and Ministry of Education Scientific Research Foundation for Chinese Overseas Returnees.

References

[1] Zhong L, et al.: Analysis of Direct Torque Control in Permanent Magnet Synchronous Motor Drives [J]. IEEE Transactions on Power Electronics, Vol. 12, No.3, p. 528-536 (1997)

[2] Rahman, M. F., et a1: A direct torque-controlled interior permanent-magnet synchronous motor drive without a speed sensor [J]. IEEE Transactions on Energy Conversion, Vol. 18, No. 1, p. 17-22 (2003)

[3] Hong Naigang. Modeling and Simulation of Power Electronics and Motor Control System [M]. China Machine Press, in Chinese (2010)

[4] Yang Junyou, He Guofeng, Cui Jiefan. Analysis of PMLSM direct thrust control system based on sliding mode variable structure [C]. Conference Proceedings-IPEMC 2006: CES/IEEE 5th International Power Electronics and Motion Control Conference, Vol.1, p. 662-666 (2007)

[5] Cui Jiefan. Study on Thrust Force of Permanent Magnet Linear Synchronous Motor and Its Direct Thrust Force Control System [D]. Shenyang University of Technology, in Chinese (2006)

Optical, Electronic Materials and Applications
10.4028/www.scientific.net/AMR.216

Modeling and Simulation of Direct Force Control for PMLSM
10.4028/www.scientific.net/AMR.216.692

DOI References

[1] Zhong L, et al.: Analysis of Direct Torque Control in Permanent Magnet Synchronous Motor rives [J]. IEEE Transactions on Power Electronics, Vol. 12, No.3, p. 528-536 (1997)
doi:10.1109/63.575680
[1] Zhong L, et al.: Analysis of Direct Torque Control in Permanent Magnet Synchronous Motor Drives [J]. IEEE Transactions on Power Electronics, Vol. 12, No.3, p. 528-536 (1997)
doi:10.1109/63.575680
[2] Rahman, M. F., et a1: A direct torque-controlled interior permanent-magnet synchronous motor drive without a speed sensor [J]. IEEE Transactions on Energy Conversion, Vol. 18, No. 1, p. 17-22 (2003)
doi:10.1109/TEC.2002.805200